Apple Service Technical Procedures Apple II/Apple III Archived Products Volume One

Apple Technical Procedures

Apple II/Apple III Archived Products

Document Control

November 1991

TECHNICAL PROCEDURES FILING INSTRUCTIONS

	REMOVE PAGES	INSERT PAGES
APPLE II/APPLE III ARCHIVED PRODUCTS - VOLUME ONE		
VOLUME Table of Contents	2 pages	2 pages
Apple III/III Plus	IPL.3	IPL.3

Please store this Document Control Sheet behind the Table of Contents at the front of the manual.

Note: All Technical Procedures changes are highlighted by a double line || in the outside margins.

Apple Technical Procedures

APPLE II/APPLE III ARCHIVED PRODUCTS

SERVICE NOTICE

APPLE II / APPLE III ARCHIVED PRODUCTS FAMILY TECHNICAL PROCEDURES MANUALS – P/N 072-0231

Apple III/Apple II Plus – Apple ships one power supply for these two computers. This power supply has an 11-pin connector. Some Apple III logic boards have 10-pin connectors. If this is the case, you need to order a 10-pin-to-11-pin cable when you order a new power supply. This information has been added to the Illustrated Parts List.

Apple Technical Procedures

Apple II Family
Apple II/Apple II Archived Products

Document Control

August 1991

TECHNICAL PROCEDURES FILING INSTRUCTIONS

	REMOVE PAGES	INSERT PAGES
APPLE II FAMILY - VOLUME ONE		
VOLUME Table of Contents	1 page	1 page
Apple IIc	6.9	6.9
APPLE II/APPLE III ARCHIVED PRODUCTS - VOLUME ONE		
VOLUME Table of Contents	2 pages	2 pages
AppleColor Monitor 100	1.7	1.7

Please store this Document Control Sheet behind the Table of Contents at the front of the manual.

Note: All Technical Procedures changes are highlighted by a double line || in the outside margins.

Apple Technical Procedures

Apple II/Apple III Archived Products

Document Control

June 1991

TECHNICAL PROCEDURES FILING INSTRUCTIONS

	REMOVE PAGES	INSERT PAGES
APPLE II FAMILY ARCHIVED PRODUCTS - VOLUME ONE		
VOLUME Table of Contents	2 pages	2 pages
AppleColor Monitor 100	1.7-1.8	1.7-1.10

Please store this Document Control Sheet behind the Table of Contents at the front of the manual.

Note: All Technical Procedures changes are highlighted by a double line || in the outside margins.

Apple Service Technical Procedures Apple II/Apple III Archived Products

Volume One

PN: 072-0231

Copyright 1982-1989 by Apple Computer Inc. January 1989

Apple Technical Procedures

Apple II/Apple III Archived Products
Volume One

Table of Contents

	--Title page (contains build date)	–
Apple II/II Plus	--Table of Contents	05/89
	--Take-Apart	03/88
	(except pages 1.1, 1.7-1.10)	07/88
	--Diagnostics	09/82
	(except page 2.1)	01/87
	--Troubleshooting	09/82
	--Illustrated Parts List	01/89
	(except page IPL.3)	11/91
	--Appendix A	09/85
	--Appendix B	09/85
	--Appendix C	05/89
Apple III/III Plus	--Table of Contents	09/88
	--Service Notes	07/86
	--Take-Apart	09/82
	(except pages 1.14-1.16)	08/83
	(except pages 1.17, 1.18)	04/86
	--Diagnostics	11/82
	(except page 2.3)	06/85
	(except page 2.7)	05/83
	(except pages 2.8, 2.10)	08/83
	--Troubleshooting	09/82
	(except page 3.1)	06/85
	(except pages 3.5-3.6)	08/82
	(except page 3.8)	06/85
	--Modifications	12/82
	(except pages 4.1, 4.12, 4.13)	09/88
	(except page 4.8)	08/87
	(except pages 4.5-4.7)	08/83
	--Apple III Plus Diagnostics	08/83
	(except page 5.3)	06/85
	--Illustrated Parts List	11/85
	(except pages 6.1, 6.3)	04/88
	(except pages 6.6, 6.7)	02/86
	--Appendix A	09/85

Disk II	--Table of Contents	02/87
	--Take-Apart	02/87
	--Troubleshooting	02/87
	--Adjustments	02/87
	--Preventive Maintenance	02/87
	--Illustrated Parts List	02/87
	(except pages 5.4, 5.5)	06/87
	(except page 5.7)	01/90
Disk III	--Table of Contents	02/87
	--Take-Apart	02/87
	--Troubleshooting	02/87
	--Adjustments	02/87
	--Preventive Maintenance	02/87
	--Illustrated Parts List	02/87
	(except pages 5.2, 5.3)	06/87
	(except page 5.7)	01/90
ProFile	--Table of Contents	03/86
	--Data Recovery	06/85
	--Troubleshooting & Exchange Procedures	03/86
	--Illustrated Parts List	02/86
	(except page 3.9)	10/86
	--Appendix	03/86
	(except page A.3)	10/87
DuoDisk	--Table of Contents	03/88
	--Basics	02/87
	--Take-Apart	02/87
	(except pages 2.1-2.2)	02/88
	(except pages 2.6, 2.7)	12/88
	--Adjustments	02/87
	--Troubleshooting	03/87
	--Preventive Maintenance	02/87
	--Additional Procedures	02/87
	(except pages 6.1-6.2)	02/88
	--Illustrated Parts List	02/88
	(except page IPL.5)	06/89
Apple IIc Flat Panel Display	--Table of Contents	04/85
	--Troubleshooting	01/85
	--Diagnostics	01/85
	--Take-Apart	01/85
	(except page 3.15)	10/85
	--Illustrated Parts List	10/85
	(except page 4.3)	07/86

Apple ColorMonitor 100	--Table of Contents	05/90
	--Basics	06/87
	(except 1.8-1.10)	06/91
	(except page 1.3)	10/88
	(except page 1.8)	08/91
	--Take-Apart	08/84
	(except page 2.35)	03/85
	(except pages 2.6, 2.9, 2.11)	12/85
	(except pages 2.12, 2.21, 2.22)	06/87
	(except pages 2.7, 2.8, 2.10, 2.13)	09/86
	(except pages 2.26-2.29, 2.34)	02/85
	(except pages 2.1-2.5, 2.23, 2.24)	05/90
	--Adjustments	08/84
	(except page 3.9)	02/85
	--Troubleshooting	08/84
	(except page 4.2)	02/85
	--Illustrated Parts List	11/85
	(except pages 5.2, 5.3)	12/86
	(except page 5.4)	07/86
	(except page 5.5)	04/87
Monitor III	--Monitor III Exchange	10/88
Apple Monitor IIc	--Table of Contents	04/85
	--Serial Number Transfer	03/85
	(except page 1.1)	02/86
	--Illustrated Parts List	04/85

Apple Technical Procedures

Apple II/II Plus

Technical Procedures

❑ TABLE OF CONTENTS

Section 1 – Take-Apart	1.2	Housing
	1.4	Motherboard
	1.5	Keyboard
	1.7	Power Supply
	1.9	Speaker Modification
	1.9	Power Cable Extension
	1.11	Power Light
Section 2 – Diagnostics	2.2	Getting Started
	2.4	Troubleshooting Chart
	2.6	Motherboard RAM Test
	2.7	Motherboard ROM Test
	2.8	Programmer's Aid Test
	2.9	Keyboard Test
	2.10	Game Paddle/Button Test
	2.11	Tape Read/Write/Verify Test
	2.12	Color Bar Test
	2.14	Graphics Tablet Test
	2.15	Applesoft/Integer ROM Card Test
	2.16	Language Card Test
	2.17	Disk Interface Card Test
	2.19	Printer (Parallel) Card Test
	2.20	Serial/Communications Card Test
	2.22	Silentype Test
Section 3 – Troubleshooting	3.3	Apple II Troubleshooting Chart
	3.5	Apple II Chip Swapping Chart

Illustrated Parts List

IPL.3 Finished Goods Assembly (Figure 1)
IPL.3 Power Supply Changed
IPL.5 Motherboard (Figure 2)
IPL.5 ProFile Interface Card (Figure 3)
IPL.5 Keyboard Encoder Card (Figure 4)
IPL.7 Super Serial Card (Figure 5)
IPL.7 Parallel Printer Board (Figure 6)
IPL.7 Disk Controller Card (Figure 7)
IPL.9 Cables (Figure 8)
IPL.11 Power Supply Fuse (Figure 9)

Appendices

A.1 Apple II Keyboard/Keyswitch Identification
B.1 Apple II Power Supply Switch Replacement
C.1 Language Card
C.2 Introduction
C.2 New Version

©Apple Computer, Inc., 1982-1989. No portion of this document may be reproduced in any form without the written permission of Apple Computer, Inc.

ProFile is a trademark of Apple Computer, Inc.

Disk II, Apple, and the Apple logo are registered trademarks of Apple Computer, Inc.

Apple Technical Procedures

Apple II/II Plus

Section 1 – Take-Apart

❑ CONTENTS

1.2 Housing
1.4 Motherboard
1.5 Keyboard
1.7 Power Supply
1.9 Speaker Modification
1.9 Power Cable Extension
1.11 Power Light

Note: These procedures apply to the pre-RFI Apple II. Because of successive revisions of the Apple II design, you may notice slight differences in the configuration of screws on particular machines you work with. These differences will not significantly alter the procedures.

❑ HOUSING

Materials Required

#2 Phillips screwdriver

Remove

1. Turn off the computer. Disconnect the power cord and video cable.

2. Remove the lid.

3. Remove all the peripheral cards and cables.

CAUTION: *Touch the power supply before touching anything inside the case. Failure to do so can cause damage to the computer or peripheral cards.*

4. Turn over the computer and place it upside down on a padded work surface.

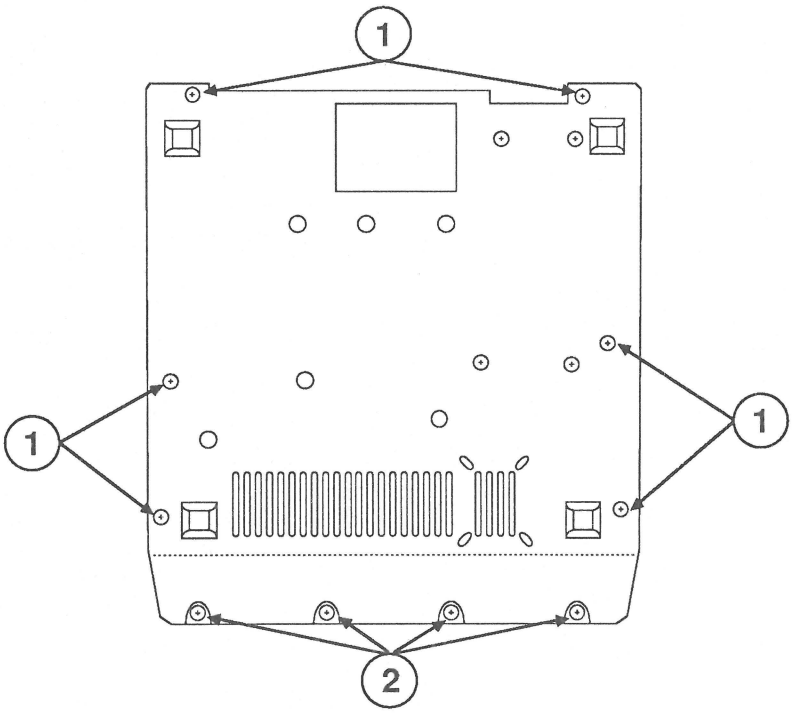

FIGURE 1

5. Remove the six flat-head screws (Figure 1, #1) from the three outside edges of the flat portion of the base pan.

6. Remove the four round-head screws and lock washers (Figure 1, #2) from the angled portion of the base pan.

7. Grasping both the base pan and the housing, turn the computer right-side up.

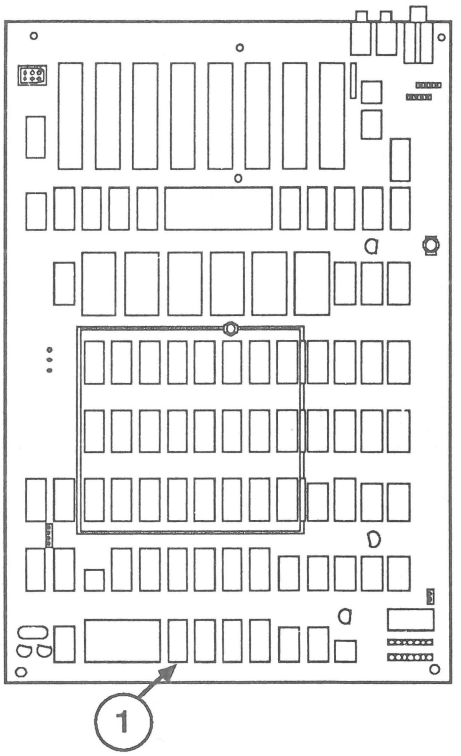

FIGURE 2

8. **Gently** lift the front of the housing slightly off the base pan and unplug the keyboard connector (Figure 2, #1) from the front of the motherboard.

9. Lift the housing off the base pan and set it aside.

Replace

1. Place the housing in position on the base pan.

2. Lift the front of the housing slightly off the base pan and attach the keyboard connector to the motherboard.

3. Grasping both the base pan and the housing, turn over the computer and place it upside down on a padded work surface.

4. Replace the six flat-head screws.

5. Replace the four round-head screws and lockwashers. Turn the computer right-side up.

6. Replace all the peripheral cards and cables.

7. Replace the lid.

8. Attach the power cord and video cable.

❑ MOTHERBOARD

Materials Required

5/16" nutdriver
Needlenose pliers

Remove

1. Remove the housing.

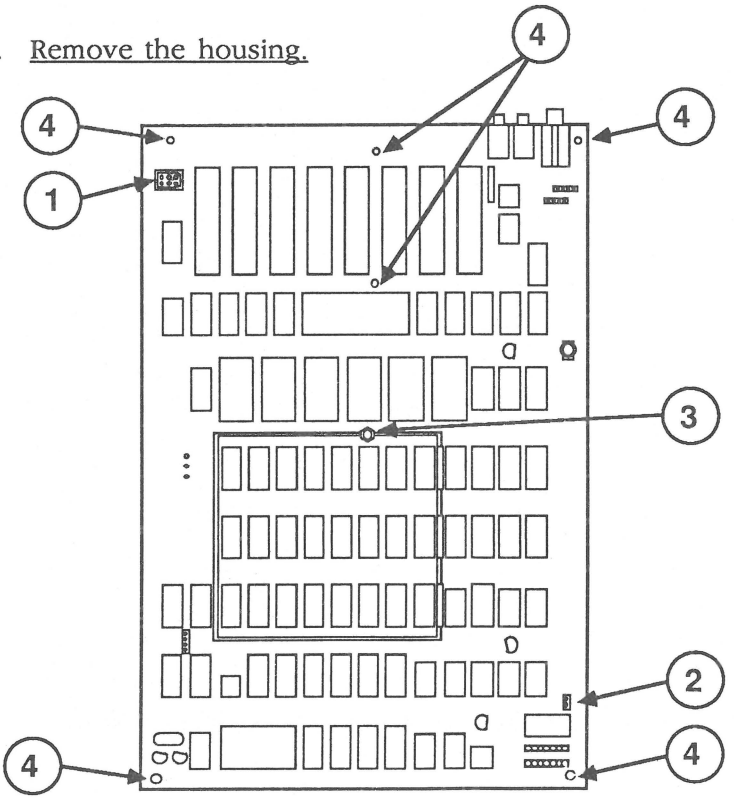

FIGURE 3

2. Pinch the front and rear sides of the power supply connector (Figure 3, #1) and pull the connector from its mating socket.

3. Unplug the speaker connector (Figure 3, #2).

4. Using the nutdriver, remove the nut and lockwasher (Figure 3, #3) in the middle of the motherboard.

5. Using the needlenose pliers, push in on the flanges of the six standoffs (Figure 3, #4).

6. **Carefully** lift the motherboard up off the base pan.

Replace

1. Place the motherboard in position over the six standoffs. Press the motherboard down at each location until you hear a click.

2. Install the washer and nut in the middle of the motherboard and tighten until snug.

3. Attach the speaker connector.

4. Attach the power supply connector.

5. Replace the housing.

❑ KEYBOARD

Materials Required

5/16" nutdriver
#2 Phillips screwdriver

Remove

1. Remove the housing.

2. Place the housing upside-down on a padded work surface.

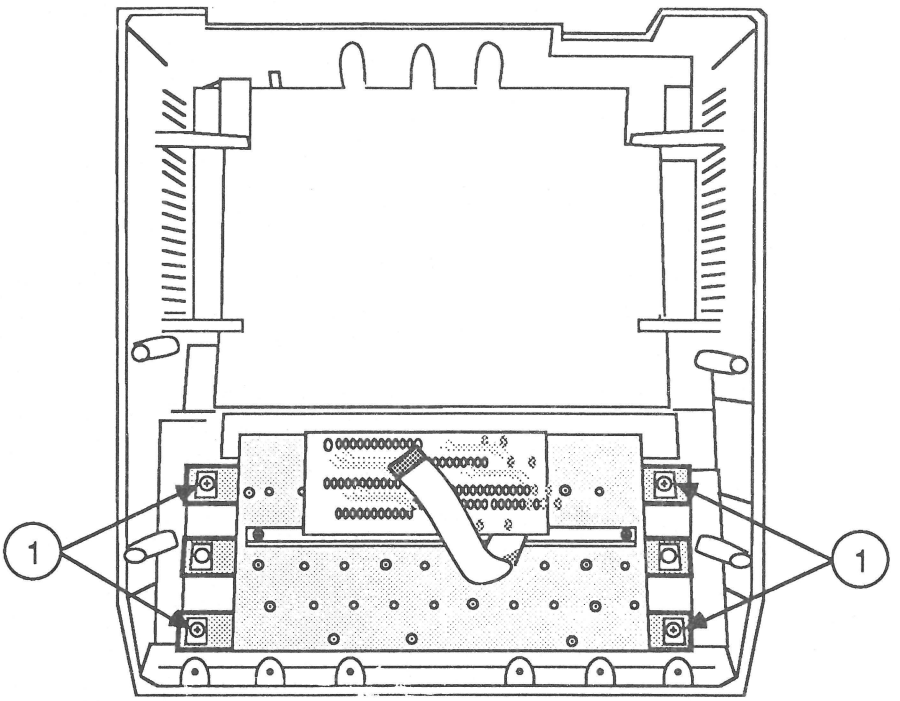

FIGURE 4

3. Remove the four nuts and lockwashers (Figure 4, #1) securing the keyboard to the housing, and remove the keyboard.

   Note: Some keyboards may be secured to the housing using Phillips screws instead of nuts.

Replace

1. Place the keyboard in position in the housing.
2. Replace the lockwashers and nuts.
3. Replace the housing.

❑ POWER SUPPLY

Materials Required

#2 Phillips screwdriver
#0 Phillips screwdriver
Strain relief bushing pliers, or regular pliers

Remove

1. Remove the housing.

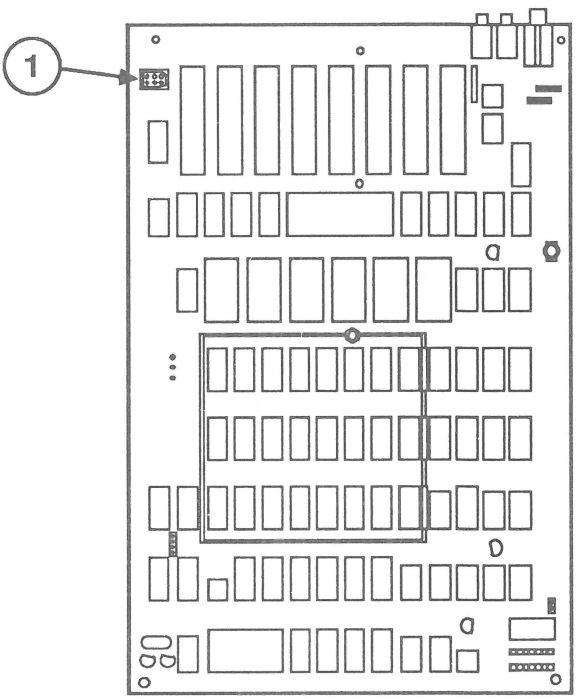

FIGURE 5

2. Pinch the front and rear sides of the power supply connector (Figure 5, #1) and pull the connector from its mating socket.

3. Turn the base pan over and place it upside-down on a padded work surface.

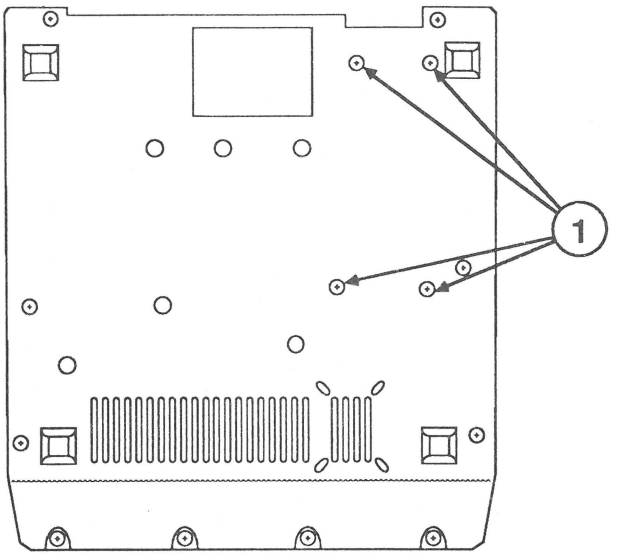

FIGURE 6

4. Using the #2 screwdriver, remove the four Phillips screws (Figure 6, #1) that secure the power supply to the base pan. Remove the base pan from the power supply.

Replace

1. Place the power supply in position on the base pan. Check for the following:

   - Longer versions of the power supply may conflict with the speaker. If you encounter this problem, before proceeding to step 2 perform the "Speaker Modification" procedure that follows this replacement procedure.

   - Shorter external power cabling on some power supplies may prevent the power supply connector from reaching its mating socket. If this condition exists, before proceeding to step 2 perform the "Power Cable Extension" procedure that follows this replacement procedure.

2. Grasping both the power supply and base pan, turn the two over and place them upside-down on a padded work surface. Replace the four Phillips screws.

3. Attach the power supply connector.

4. Replace the housing.

Speaker Modification

1. Remove the speaker from the base pan by wedging the flatblade screwdriver under the speaker and **gently** prying up until it comes free.

CAUTION: *Be careful not to damage the speaker while performing this step.*

2. Apply a small amount of contact cement to the base of the speaker.

3. Place the speaker approximately 1" back from the start of the incline of the base pan.

Power Cable Extension

This procedure should be performed only if a short power cable is preventing the power supply connector from reaching its mating socket.

WARNING: *Do not perform the following procedure with the power supply connected to a power cable.*

1. Using the #0 Phillips screwdriver, remove the two flat-head screws (Figure 7, #1) and the two round-head screws (Figure 7, #2) that secure the power supply cover to the power supply. Remove the cover from the power supply.

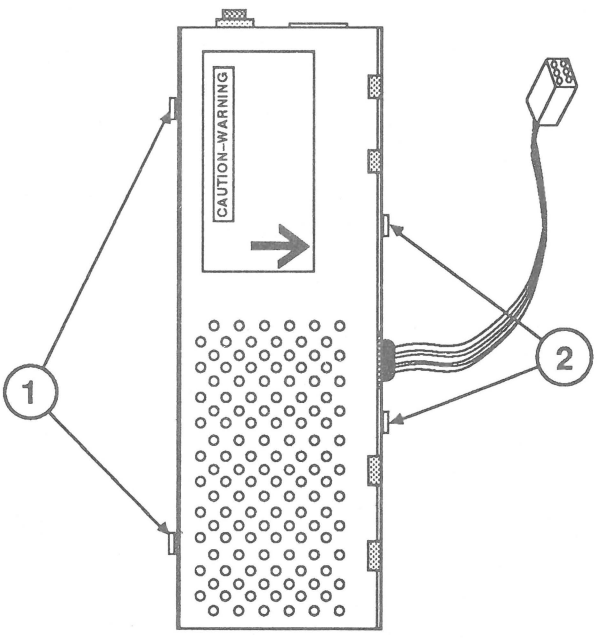

FIGURE 7

2. Using the bushing pliers (or regular pliers if strain relief bushing pliers are unavailable), pinch the power cable strain relief bushing (Figure 8, #1), and pull the bushing from the power supply housing.

3. Pull excess power cabling through the power supply housing. Pull until the cable (Figure 8, #2) inside the power supply is taut. Make sure this cable is routed between the housing and heatsink (Figure 8, #3), and is not touching the heatsink. The proper positioning is shown in Figure 8.

4. Unclasp and reposition the strain relief bushing on the power cable. Cut any tie wraps that may prevent you from pulling the cable taut or from positioning the bushing near the power supply housing.

5. Clamp the bushing on the power cable, and replace the bushing on the power supply housing.

6. Position the cover on the power supply, and replace the two round-head screws and the two flat-head screws.

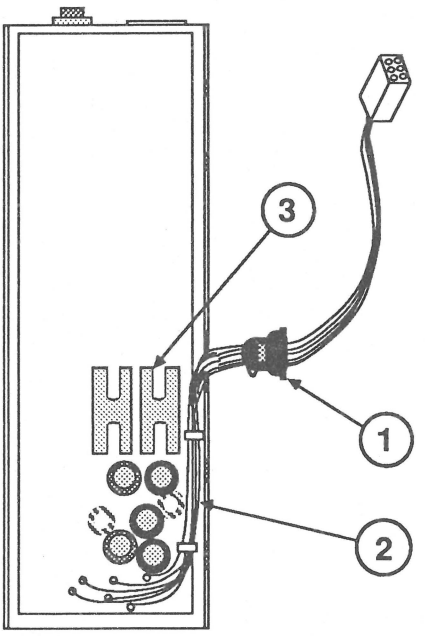

FIGURE 8

❑ POWER LIGHT

Materials Required

Needlenose pliers
Small, flatblade screwdriver
Replacement bulb

Procedure

1. Using the screwdriver, pry off the power light cap.
2. Lift off the shift-key keycap.
3. If the light has a full shield around it, pry off the shield. If the light has a half shield, don't try to remove it.
4. Using the needlenose pliers or your fingers, lift out the bulb.
5. Place the new bulb in position. Make sure to put both wires into their corresponding sockets.
6. If you removed the plastic shield, replace it.
7. Replace the shift-key keycap and power light cap.

Apple Technical Procedures

Apple II/II Plus

Section 2 – Diagnostics

❑ CONTENTS

2.3 Getting Started
2.4 Troubleshooting Chart
2.6 Motherboard RAM Test
2.7 Motherboard ROM Test
2.8 Programmer's Aid Test
2.9 Keyboard Test
2.10 Game Paddle/Button Test
2.11 Tape Read/Write/Verify Test
2.12 Color Bar Test
2.14 Graphics Tablet Test
2.15 AppleSoft/Integer ROM Card Test
2.16 Language Card Test
2.17 Disk Interface Card Test
2.19 Printer (Parallel) Card Test
2.20 Serial/Communications Card Test
2.22 Silentype Test

Note: The Apple II Product Diagnostic diskette cannot be used to test the Super Serial Card (which replaces the old Serial/Communications Card), the Apple II Parallel Card (which replaces the old Printer Card) or any other Apple interface cards introduced after 1982.

❑ GETTING STARTED

The Apple II Product Diagnostics diskette contains a series of tests that are designed to help you troubleshoot system problems and make adjustments to commonly used Apple peripherals. The job aids in this package provide brief descriptions of the function of each test, and guidelines on how to use them.

Before you can use the Product Diagnostics, you must have 48K of memory in the system (all of the memory sockets on the motherboard must have memory ICs installed in them.)

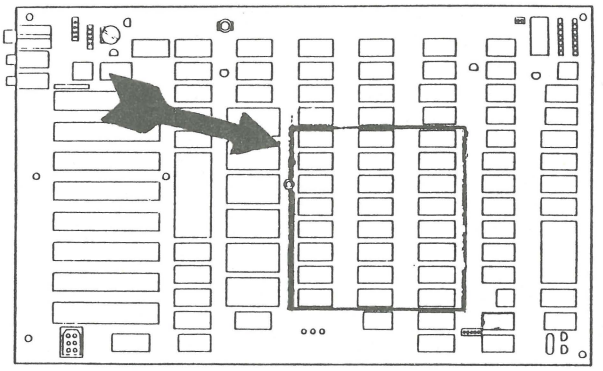

You must also have the P5A (341-0027) and P6A (341-0028) PROMs installed on the Disk Interface card in slot 6.

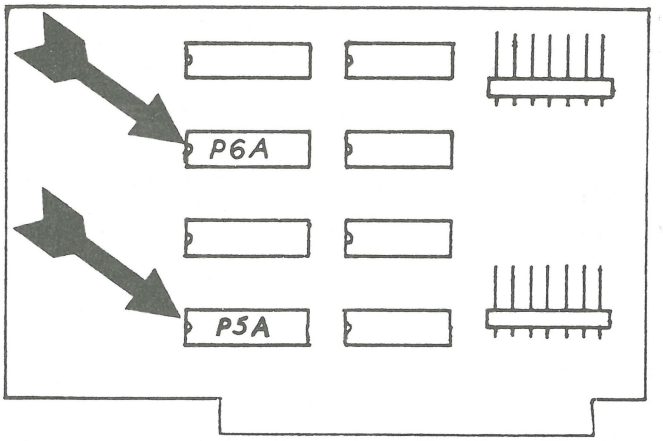

❑ TROUBLESHOOTING CHART

This chart is designed to help you decide which test to use for most common problems. Just find the type of complaint that the customer has in the first column, then use the test listed in the second column. Detailed test procedures are outlined later in this section.

Complaint	Test
• *Flaky System*	– Motherboard RAM
• *Can't use some BASIC programs (motherboard BASIC)*	– Motherboard ROM
• *Can't use some BASIC programs (firmware card BASIC)*	– AppleSoft/Integer ROM card
• *Can't use some programs (language card language)*	– Language card
• *Can't use some programs (not language related)*	– Motherboard RAM
• *ROM Utilities won't work*	– Programmer's Aid #1
• *Missing characters*	– Keyboard
• *Can't select menu items*	– Keyboard

Complaint	Test
• *Paddle/Button problems*	– Game Paddle/Button
• *Tape problems*	– Tape Read/Write/Verify
• *Display problems*	1. Color Bar 2. Motherboard RAM
• *Graphics Tablet problems*	– Graphics Tablet
• *Disk problems*	– Disk I/F card
• *Parallel printer problems*	– Printer card
• *Serial printer problems*	– Serial/Communications card
• *Silentype problems*	– Silentype test
• *Modem problems*	– Serial/Communications card

❑ MOTHERBOARD RAM TEST

You would use this test if the customer told you that his system acted "flaky" or wouldn't run certain programs (after you try a known good copy of the suspect program to eliminate the possibility of a software problem). The CONTINUOUS TEST option is useful for finding intermittent problems, and for "burning-in" a system (running it to make sure that it won't fail soon after the customer gets it home).

This diagnostic tests each RAM (Random Access Memory) IC on the motherboard. It also checks the RAM at location E2 on the Language Card if that card is installed. During the test, the disk drive is activated to cause electrical noise and put a heavy load on the power supply. These conditions make it more likely that marginal RAMs will fail the test.

Test

1. Boot the Apple II Product Diagnostics diskette.

2. Use the <ESC> key to move the cursor to the MOTHERBOARD RAM TEST line text on the main menu, then press <RETURN>.

3. When the title screen appears, you are given a choice of running the test or returning to the main menu (just in case you made a mistake). Press <RETURN> to run the test.

The test will run with no more inputs from you. First you will see a screen full of inverse "@"s, followed by a screen full of normal "?"s. Each of those screens lasts about 30 seconds, and some flickering during the first few seconds of each screen is normal. After these screens, you will see a screen of garbage (you'll know it when you see it), that will change a few times. When the test is over, the results screen will be displayed. This screen is self-explanatory. At the bottom of the screen is a mini-menu that works with the <ESC> and <RETURN> keys in the same fashion as the main menu.

4. If you want to run the memory test for an extended period, select CONTINUOUS TEST and press <RETURN>. The test will then cycle until you press <ESC>, which will return you to the results screen.

If bad ICs are indicated, replace them and rerun the test.

❑ MOTHERBOARD ROM TEST

You would use this test if a customer said that his system had problems running some or all BASIC programs.

This test checks each ROM (Read Only Memory) in the INTEGER or APPLESOFT set on the motherboard, whichever is present.

Test

1. Boot the Apple II Product Diagnostics diskette.

2. Use the <ESC> key to move the cursor to the MOTHERBOARD ROM TEST line on the main menu, then press <RETURN>.

   Note: This test MUST be observed during operation as it does not "keep records" and report its results as the RAM test does.

The test will run with no other inputs from you. As each ROM is tested the program will display the name of the ROM. After testing, it will report either "NO ERRORS FOUND" (for a good ROM) or "CAN'T MATCH CODE" (for a bad one). If there is an error, the test will stop; otherwise it will go on to the next ROM. When all of the ROMs have been tested, it will return to the main menu.

If one of the ROMs fails, replace it and run the test again.

❑ PROGRAMMER'S AID #1 TEST

You would use this test if the customer complains that any or all of the functions supported by the Programmer's Aid #1 ROM aren't working correctly. (See the Progammer's Aid #1 manual for a list.)

The test checks the Programmer's Aid #1 utility ROM.

Test

1. Install the Programmer's Aid #1 ROM (341-0016) at the DO position on the motherboard (location F11) if you have an Apple II, or the INTEGER ROM card (location A1) if you have an Apple II+.

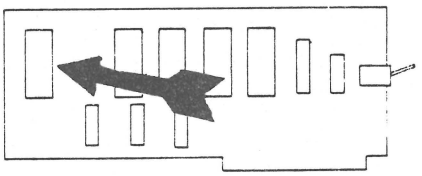

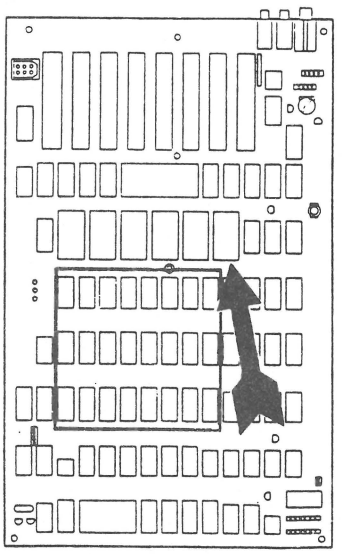

2. Boot the Apple II Product Diagnostics diskette.

3. Use the <ESC> key to move the cursor to the PROGRAMMER'S AID #1 TEST line on the main menu, then press <RETURN>.

   Note: This test MUST be observed in operation, as it does not "keep records" and report its results as the RAM test does.

The test will run with no further inputs from you. The message "NO ERRORS ENCOUNTERED" will be displayed if the ROM is good, otherwise the message "UNABLE TO MATCH CODE" will appear. The program will then return to the main menu.

If the ROM fails, replace it and run the test again.

❑ KEYBOARD TEST

You would use this test if the customer complains about missing characters when entering data/commands/text or not being able to select functions (like menu items) when using programs.

This test checks (actually, it allows you to check) each key on the keyboard, the keyboard encoder circuits, and the keyboard cable. The test procedure also checks the operation of the shift and control keys in combination with other keys.

Test

1. Boot the Apple II Product Diagnostics diskette.

2. Use the <ESC> key to move the cursor to the KEYBOARD TEST line on the main menu, then press <RETURN>.

After the test is loaded, an introductory screen will be displayed. This screen tells you how to run the test, and explains what you will see on the test screen.

3. Press any key to proceed to the test. When the test screen is displayed, blank out the keyboard "picture" by pressing keys. Make sure that you test both shift keys in the process. To extinguish the inverse characters, hold down the <CTRL> key and press the appropriate letter keys. The <ESC>, <RETURN>, and <ARROW> keys blank out the brackets, backslash, and underscore that represent them on the "picture".

4. After all of the "keys" are blanked out, press the SPACEBAR to return to the menu.

If any single key fails the test, replace the keyboard mechanical assembly (or just the key if you wish). Any other problem indicates a bad keyboard electronic assembly (piggy-backed to the rear of the keyboard mechanical assembly) or the cable, so replace one of them (then the other if the problem remains). After replacing the appropriate module, run the test again.

❑ GAME PADDLE/BUTTON TEST

You would use this test if the customer complains that his paddles aren't working properly.

This test allows you to check the game paddles/buttons, and the circuitry on the motherboard that interfaces with the paddles/buttons.

Test

1. Connect the Game Paddles to the GAME I/O socket near the motherboard's right rear corner (to the right of the front end of the last peripheral slot).

2. Boot the Apple II Product Diagnostics diskette.

3. Use the <ESC> key to move the cursor to the GAME PADDLE/BUTTON TEST line on the main menu, then press <RETURN>.

After the test is loaded, a screen will be displayed. This screen explains how to use the test screen.

4. Press any key to get to the test screen. Markers on the bottom and right edges of the white square show the actual values being read from the paddles.

5. Slowly rotate each paddle control through its entire range. The asterisk should move around the white area. The markers should keep pace, indicating values from 0 to 255. The sweep of values should cover the full range of rotation of the control (i.e. they shouldn't read 0 or 255 when the control isn't near one of it's limits).

6. Push each paddle button. The white area should turn black and the asterisk should turn white. The "colors" will swap repeatedly if the button is held in.

7. Press <ESC> to return to the main menu when you have finished.

If any part of the test fails, replace the paddles and run the test again. If it still fails, replace the motherboard and run the test again. Alternatively you could test the paddles on a system with a known good motherboard. If the test fails there, the paddles are bad; if it passes, the motherboard in the customer's system is bad.

❑ TAPE READ/WRITE/VERIFY TEST

You would use this test when the customer complains that he can't save data or programs on tape or can't read them from tape.

This test checks the tape recorder itself, the audio cables, and the circuitry on the motherboard that writes to and reads from a tape recorder. It can also be used to "calibrate" a tape recorder to work with the system.

Test

1. Connect a cable between the CASSETTE OUT jack on the rear of the Apple II and the input (MIC) jack on the recorder (this is for the write phase). Connect another cable from the output (MON) jack on the recorder to the CASSETTE IN jack on the Apple II (this is the read phase).

2. Put a scratch (expendable) tape in the recorder and rewind it. Set the record and playback levels to mid-range.

3. Boot the Apple II Product Diagnostics diskette.

4. Use the <ESC> key to move the cursor to the TAPE READ/WRITE/VERIFY TEST line on the main menu, then press <RETURN>.

Instructions will be displayed for each phase of the test. Simply follow them as they appear. The write phase and read phase will each take about 10 seconds. The message "TAPE READ/WRITE TEST OK" will appear after the test is finished.

If errors are found, you will be told to readjust the recorder and try again.

If the test locks up (doesn't do anything new after a long time), nothing is being read from the tape. Make sure that the recorder is working (you can test it with a microphone and your voice). The cables must be good to carry the signal both ways. Check for continuity and shorts, or try a different set. The volume must be set - this is a trial and error process (the specification is 1V peak to peak at the cassette input jack).

...Continued on next page

If the recorder is working and set up properly (maybe it works with another system?) and the cables are good, replace the motherboard and run the test again.

❑ COLOR BAR TEST

You would use this test if the customer complained about display problems.

This test allows you to check the display device (monitor or TV), the video cable, and the video generating circuitry on the motherboard.

Test

1. Boot the Apple II Product Diagnostics diskette.

2. Use the <ESC> key to move the cursor to the COLOR BAR TEST line on the main menu, then press <RETURN>.

An introductory screen will be displayed, giving instructions on how to use the test screen. You are also given a choice of returning to the main menu or proceeding with the test.

3. Press <RETURN> to proceed with the test.

The test screen that is displayed consists of a set of color bars in a frame. The numbers along the bottom of the frame are the color codes. The colors are:

Color Codes

0=black	1=magenta	2=dark blue	3=purple
4=dark green	5=gray	6=med blue	7=light blue
8=brown	9=orange	10=gray	11=pink
12=green	13=yellow	14=aqua	15=white

Note: Don't try to adjust the color trimmer capacitor on a black and white display; you won't see any changes.

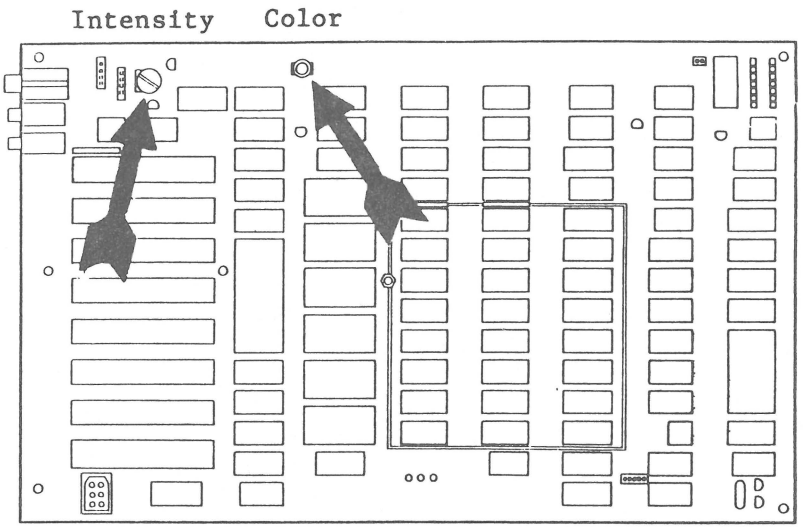

4. When you are finished, press <ESC> to return to the main menu.

If the picture cannot be made acceptable, try a different monitor and/or cable and run the test again. If the problem persists, replace the motherboard and run the test again.

❑ GRAPHICS TABLET TEST

You would use this test if the customer complained about problems with a graphics tablet.

This test allow you to check the operation of the Graphics Tablet, Graphics Tablet Pen, and Graphics Tablet Interface Card.

Test

1. Install the Graphics Tablet Interface card in slot 4 and connect the tablet and pen to it.

2. Boot the Apple II Product Diagnostics diskette.

3. Use the <ESC> key to move the cursor to the CARD TESTS line on the main menu, then press <RETURN>.

4. Use the <ESC> key to move the cursor to the GRAPHICS TABLET TEST line on the card tests menu, then press <RETURN>.

5. The first screen lists some things that must be done before the test will run. If any of the conditions have not been met, do whatever is necessary to meet them and start again. Otherwise, press <ESC> to continue.

The test will check the ROM on the interface card and report whether it is good or bad, give you instructions on adjusting the interface card, display a set-up screen for doing the adjustment, give instructions for testing the tablet, display a screen for that test, and tell you if the tablet works.

If the ROM test fails, replace the ROM and run the test again. If you can't get the correct display during the interface card adjustment, replace thepen and run the test again. If the attempted repair doesn't fix the problem, replace the interface card. If you get missing dots during the surface test, replace the tablet.

❑ APPLESOFT/INTEGER ROM CARD TEST

You would use this test if the customer complained about problems in running programs written in the type of BASIC contained on the firmware card.

This test checks each ROM in the APPLESOFT or INTEGER set on a firmware card, whichever is installed.

Test

1. Install the firmware card in slot 0.

2. Boot the Apple II Product Diagnostics diskette.

3. Use the <ESC> key to move the cursor to the CARD TESTS line on the main menu, then press <RETURN>.

4. Use the <ESC> key to move the cursor to the APPLESOFT/INTEGER ROM CARD line on the card test menu, then press <RETURN>.

   Note: This test MUST be observed during operation as it does not "keep records" and report its results as the RAM test does.

The test will run with no more inputs from you. As each ROM is tested the program will display the name of the ROM. After testing the ROM it will report either "NO ERRORS FOUND" (for a good ROM) or "CAN'T MATCH CODE" (for a bad one), then it will go on to the next ROM. When all of the ROMs have been tested, it will return to the card test menu.

If any of the ROMs fail, replace it and run the test again.

❑ LANGUAGE CARD TEST

You would use this test if the customer complained about problems loading or running programs that use the language card (e.g. Pascal, Pilot, Logo, Fortran, Cobol, etc.).

This test checks the RAM and the Autostart ROM located on the language card. The disk drive is activated during the test to create electrical noise and to put a heavy load on the power supply. These conditions make it more likely that marginal RAM will fail.

Test

1. Install the Language card in slot 0. The cable replaces the RAM IC at location E3 on the motherboard (the left rear corner of the outlined memory area)

2. Boot the Apple II Product Diagnostics diskette.

3. Use the <ESC> key to move the cursor to the CARD TESTS line on the main menu, then press <RETURN>.

4. Use the <ESC> key to move the cursor to the LANGUAGE CARD line on the card test menu, then press <RETURN>.

The test will check the language card RAM and display the results. The results screen has a mini-menu at the bottom that works with the <ESC> and <RETURN> keys as the other menus do. RETEST and BEGIN CONTINUOUS TEST refer to the RAM test only, not to the entire language card test.

5. Select PROCEED WITH TEST and press <RETURN>.

The test will display two status pages, then test the Autostart ROM. You'll have to press a key to proceed from each of those steps to the next. For the ROM test, the message "NO ERRORS ENCOUNTERED" (for a good ROM) or "CANNOT MATCH CODE" (for a bad ROM) will be displayed briefly (so you must be watching) before the test returns to the card test menu.

If any RAM is shown as bad on the results screen, replace the bad IC and run the test again. If any status states are bad, replace the language card and run the test again. If the ROM fails, replace the ROM and run the test again.

❑ DISK INTERFACE CARD TEST

You would run this test if the customer complained about problems in saving programs or loading them from a diskette.

This test checks the P5 or P5A PROM installed at location D3 on the Disk Interface card, whichever is installed.

Test

1. Note whether the Disk Interface card has a P5 (341-0009) or P5A (341-0027) PROM installed at location D3.

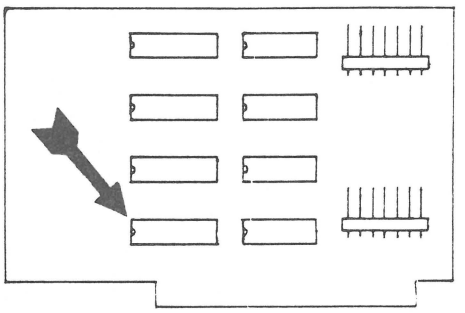

2. Install the Disk Interface card in slot 6.

   Note: If you are unable to boot using the Interface card being tested (because it has a P5 PROM or won't work), install it in a slot other than 0 or 6, and boot with a known good Interface card in slot 6.

3. Boot the Apple II Product Diagnostics diskette.

4. Use the <ESC> key to move the cursor to the CARD TESTS line on the main menu, then press <RETURN>.

5. Use the <ESC> key to move the cursor to the DISK I/F CARD line on the card test menu, then press <RETURN>.

6. When prompted to do so, enter the slot number where the Disk Interface Card is installed.

7. When asked if the language card PROM is installed, answer Y if there is a P5A PROM or N if there is a P5 PROM on the card.

   Note: This test MUST be observed while running, as it doesn't "keep records" or maintain a results display like the RAM test.

The test will finish with no more inputs from you. If the PROM checks out OK, it will tell you so. If not, the message "UNABLE TO MATCH CODE" will be displayed. After reporting its results, it returns to the card test menu.

If the PROM fails, replace it and run the test again. If the problem persists, replace the interface card and run the test again.

❑ PRINTER CARD TEST

You would use this test if a customer complained about problems in the operation of a parallel printer (i.e. DMP, Epson or Centronics).

This test checks the PROM on the APPLE Parallel Interface card.

Test

1. Turn the Apple II off.
2. Install the Parallel Interface card in peripheral slot.
3. Boot the Apple II Product Diagnostics diskette.
4. Use the <ESC> key to move the cursor to the CARD TESTS line on the main menu, then press <RETURN>.
5. Use the <ESC> key to move the cursor to the PRINTER CARD line on the card test menu, then press <RETURN>.
6. When prompted to do so, enter the slot number where the Parallel Interface card is installed (slot 1).

   Note: This test MUST be observed during operation, as it doesn't "keep records" and it returns to the menu when it is done.

The test will run with no further inputs from you. When it is done, it will report "CODE CHECKS OUT OK" for a good "PROM" or "UNABLE TO MATCH CODE" for a bad one.

If the PROM fails the test, replace it and run the test again. If the problem persists, replace the Interface card.

❑ SERIAL/COMMUNICATIONS CARD TEST

You would use this test if the customer complained about problems in the operation of a serial printer (e.g. Qume or Diablo) or modem.

This test checks the Apple Serial Interface card and the Apple Communications Interface card. Both cards must be installed for the test to operate.

Test

1. Install the Serial Interface Card in slot 1, and the Communications Interface card in slot 2.

2. Connect a loop-back jumper cable between the Serial Interface and Communications Interface connectors.

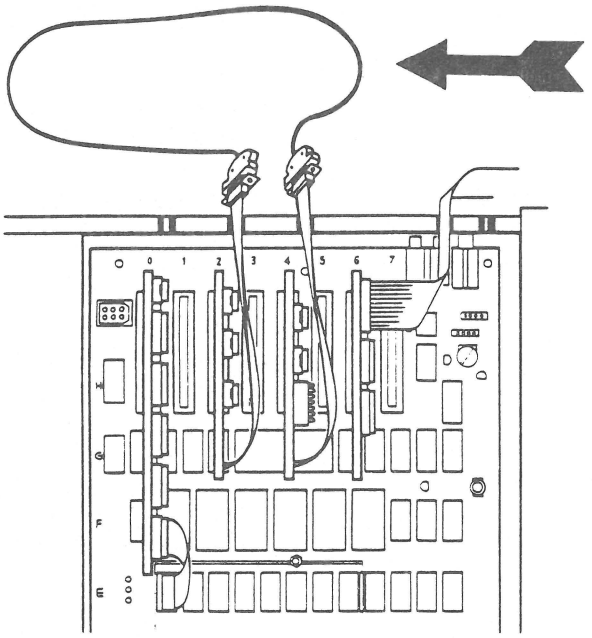

3. Boot the Apple II Product Diagnostics diskette.

4. Use the <ESC> key to move the cursor to the CARD TESTS line on the main menu, then press <RETURN>.

5. Use the <ESC> key to move the cursor to the SERIAL/COMMUNICATION CARD line on the card test menu, then press <RETURN>.

6. When prompted to do so, enter the slot numbers for the Serial Interface card (slot 1) and the Communication Interface card (slot 2). The test will check the PROMs on both cards, reporting their status (CODE CHECKS OUT OK or UNABLE TO MATCH CODE).

7. When the switch test screen appears, make sure that the picture matches the actual DIP switch positions on the Serial card. Then manipulate each switch to both of its positions and watch to see that the picture follows the switch. Finish up with all of the switches ON except switch #2.

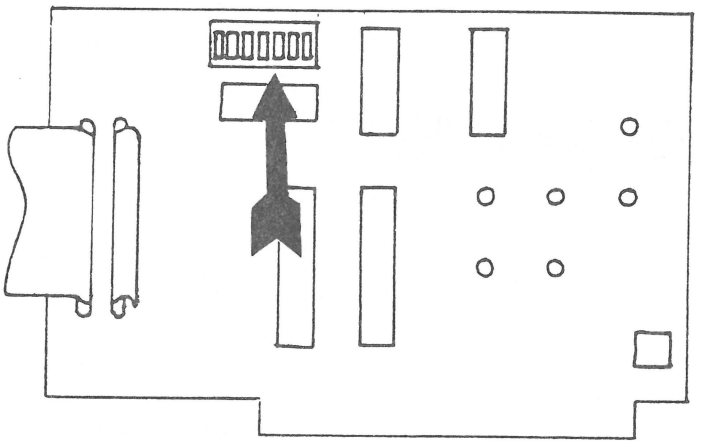

8. Press <ESC>. When the communications test screen appears, slowly type a few characters. The characters that you type should appear on both the SENT and RECEIVED lines.

9. When you are satisfied that the communication from Serial card to Communications card is good (about 8 characters), press <ESC> ONCE. This will reverse the direction of the test. The screen will look almost identical except for the labels on the SENT and RECEIVED lines.

10. Slowly type a few more characters. They should appear on the SENT and RECEIVED lines as you type them.

11. When you are satisfied that the Communications card is talking to the Serial card properly, press <ESC>.

The test will display a status screen, telling you what revision PROMs are on each card and whether the cards are working properly.

If any of the PROMs fails the test, replace it. If the problem persists, replace the appropriate card. If the switch setting test doesn't work, replace the Serial card. If the communication test fails, replace the Serial card. If it still fails, replace the Communications card. After any of these actions, run the test again.

❑ SILENTYPE TEST

You would use this test if the customer complained about poor print quality or any problems in the operation of the Silentype.

This test checks the PROM and RAM on the Silentype Interface card and the various functions of the printer mechanism. You have the option at the beginning of the test of printing a printer alignment pattern instead of running the test.

Test

1. Install the Silentype Interface card in slot 1 and connect the Silentype to it.

2. Boot the Apple II Product Diagnostics diskette.

3. Use the <ESC> key to move the cursor to the CARD TESTS line on the main menu, then press <RETURN>.

4. Use the <ESC> key to move the cursor to the SILENTYPE TEST line on the card test menu, then press <RETURN>.

5. When given the option of aligning the print head, reply "N" (unless you are doing an alignment, which is beyond the scope of this lesson).

The test will check the PROM (firmware) and RAM on the Silentype Interface card and report the status of each. It will then check the margin switch on the Silentype and report its status.

6. The test will now exercise the carriage and paper drives, printing and variable intensity circuits, and bi-directional print function. It takes a few seconds after the screens appear before the tests actually start. Judge the printer's performance in each step according to the standards given by the diagnostic. Enter "Y" if it is acceptable or "N" if it isn't. If all of the tests pass, the test will return to the card test menu.

It would be redundant to list here what you should do if a part of the Silentype test fails, because a list of recommended corrective actions is provided by the test itself in the event of failure (including if you tell it that the result of one of the print function tests was unacceptable).

Apple Technical Procedures

Apple II

Section 3 – Troubleshooting

❑ CONTENTS

3.3 Apple II Troubleshooting Chart
3.5 Apple II Chip Swapping Chart

❑ APPLE II TROUBLESHOOTING CHART

Note: The Probable Causes are listed in the order of probable failure. It is recommended that Probable Causes are checked or replaced in the order listed.

Symptom	Probable Cause
• *Apple will not boot; drive comes on*	1. RAM row E 2. RAM on Language Card at location E2 3. Motherboard
• *Programs run erratically, often crash*	1. RAM 2. Motherboard
• *No beep and no message is displayed; monitor has random characters on screen when the Apple is turned on; drive does not come on*	1. RAM row C 2. "F8" ROM at location F3 on the motherboard 3. "F8" ROM on the Language Card at location E2 4. Motherboard
• *Peripheral does not work properly*	– Motherboard
• *Keys fail to remove appropriate character from the keyboard test on the Apple II diagnostic*	1. Keyboard Cable 2. Keyboard Electronic 3. Keyboard Mechanical 4. Motherboard
• *AppleSoft or Integer BASIC fails to operate or is erratic*	1. ROM 2. Motherboard

Symptom	Probable Cause
• *Game I/O port malfunction (Check with diagnostic)*	1. Game Paddles 2. Motherboard
• *All video malfunctions (Graphics and Text)*	– Motherboard
• *Cassette Interface malfunction*	– Motherboard
• *Apple II system dead (No beep, no video, no power light)*	1. Power Supply 2. Motherboard
• *Apple II system dead (No beep, no video, power light on)*	1. Power Supply 2. Motherboard
• *Speaker malfunction*	1. Speaker 2. Motherboard
• *No video display*	1. Video Cable 2. Video Pot adjustment 3. Motherboard

❑ APPLE II CHIP SWAPPING CHART

Symptom	Location(s)	Defective Chip Type
• *Dead Apple System (Power On Light)*	A2	74LS00
	B1	74S174
	B2	74S86
	B13	74LS02
	C1	74LS153
	C2	74LS195
• *No RESET or No Response*	A13	555
	B5	74LS174
	B6	74LS257
	B7	74LS257
	B8	74LS174
	B11	74LS08
	C14	74LS32
	E11,12,13	74LS153
	F12	74LS138
	F13	74LS138
	F14	9334
	H1	74LS08
	H3,4,5	8T97
	H8	6502
	H10,11	8T28
	H14	74LS5251
• *Apparent ROM Problems*	F12	74LS13
	H1	74LS08
• *Apparent RAM Problems*	A2	74LS00
	B5,8	74LS174
	C14	74LS32
	D2	74LS20
	E2	74LS139
	E11,12,13	74LS153
	F2	74LS139
	H1	74LS08

Symptom	Location(s)	Defective Chip Type
• *No Video (Speaker Does Beep)*	A2	74LS00
	A8	74LS257
	A9	74LS151
	A10	74LS194
	B2	74S86
	B10	74LS74
	B13	74LS02
	C2	74LS195
	C11	74LS04
	D11,12,13,14	74LS161
• *No Text Mode*	A3	74166
	A5	1513
	A8	74LS257
	A9	74LS151
	A10	74LS194
	B2	74S86
• *HIRES or LORES Problem*	A0	74LS194
	A8	74LS257
	A9	74LS151
	A11	74LS74
	B4,9	74LS194
	B10	74LS74
	C11	74LS04
	C12	74LS257
	F14	9334
	H1	74LS08
	J1	74LS257
• *Dark Screen*	A2	74LS00
	B1	74LS174
	B2	74S86
	C1	74LS153
	C2	74LS195
• *V or H SYNC Fails*	C13	74LS51
	C14	74LS32
	D11,12,13,14	74LS161

Symptom	Location(s)	Defective Chip Type
• *Wrong Page or Video Mode*	B5,8	74LS174
	B11	74LS08
	B12	74LS11
	B13	74LS02
	C11	74LS04
	C12	74LS257
	E11,12,13	74LS153
	E14	74LS283
	F2	74LS139
	F14	9334
	H1	74LS08
	J1	74LS257
• *Wrong or Bad CHRS*	A3	74166
	A5	1513
	B5,8	74LS174
	B6,7	74LS257
• *Bad Cursor*	A3	74166
	B2	74S86
	B11	74LS08
	B13	74LS02
• *Bad Graphics*	A8	74LS257
	A9	74LS151
	A10	74LS194
	A11	74LS74
	B4,9	74LS194
• *No Color*	B12	74LS11
	B13	74LS02
	C13	74LS51
• *Game Paddles Problem*	F13	74LS138
	H13	558
	H14	74LS251
• *Cassette Loading Problem*	F13	74LS138
	H14	74LS251
	K12	741 OP AMP

Symptom	Location(s)	Defective Chip Type
• *Cassette Saving Problem*	F13 K13	74LS138 74LS74
• *Speaker Problem*	F13 K13	74LS138 74LS74
• *Keyboard Problem*	A12 B6,7 B10 C11 F13	74LS02 74LS257 74LS74 74LS04 74LS138
• *Peripheral Card in Slot Won't Work*	H2,12	74LS138

Apple Technical Procedures

Apple II / II Plus

Illustrated Parts List

❑ CONTENTS

IPL.3 Finished Goods Assembly (Figure 1)
IPL.3 Power Supply Changed
IPL.5 Motherboard (Figure 2)
IPL.5 ProFile Interface Card (Figure 3)
IPL.5 Keyboard Encoder Card (Figure 4)
IPL.7 Super Serial Card (Figure 5)
IPL.7 Parallel Printer Board (Figure 6)
IPL.7 Disk Controller Card (Figure 7)
IPL.9 Cables (Figure 8)
IPL.11 Power Supply Fuse (Figure 9)

The figures and lists in this section include all piece parts that can be purchased separately from Apple for the Apple II/Apple II Plus, along with their part numbers. These are the only parts available from Apple. Refer to your *Apple Service Programs* manual for prices.

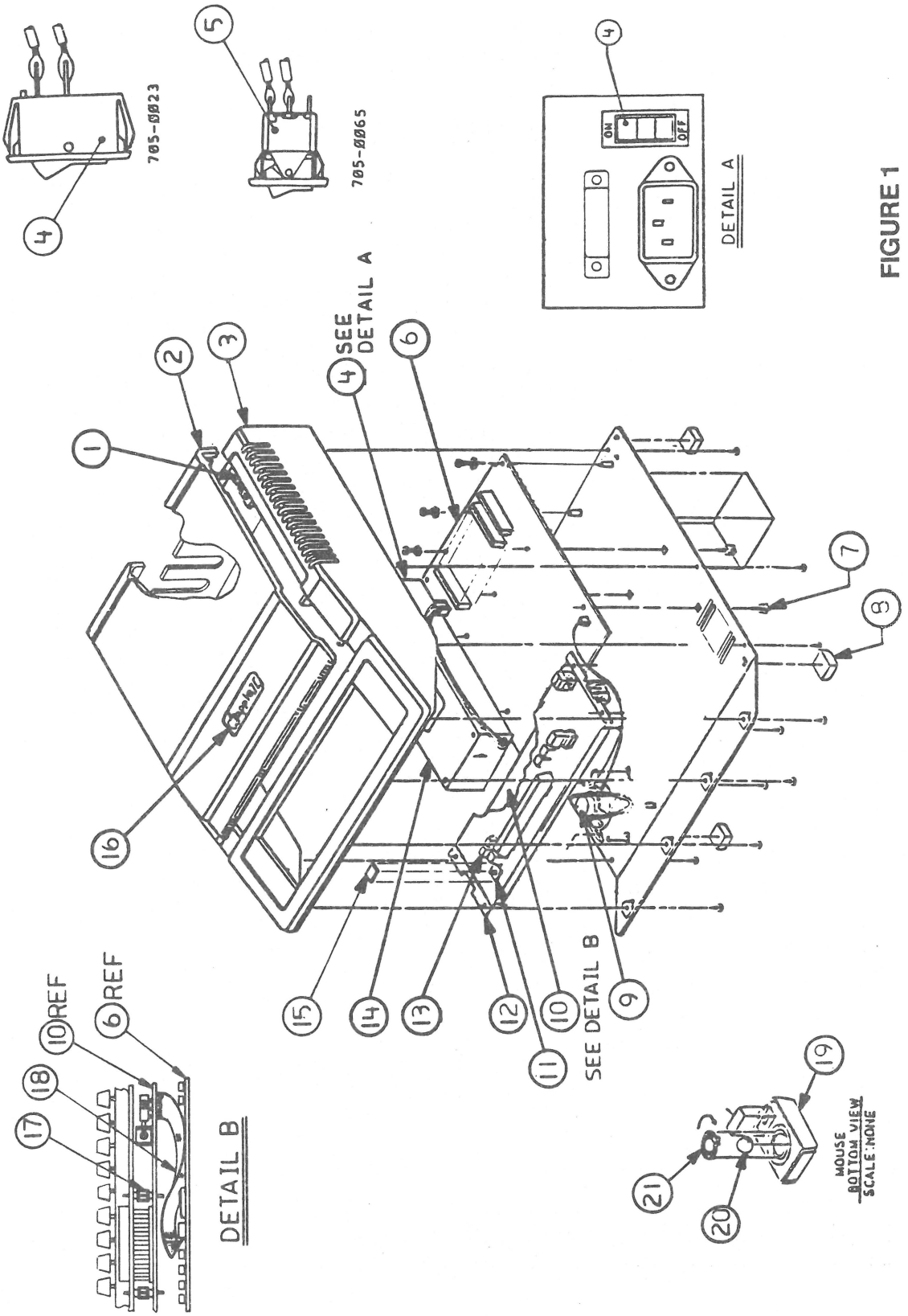
705-0023
705-0065
DETAIL A
SEE DETAIL A
SEE DETAIL B
DETAIL B
10 REF
6 REF
MOUSE
BOTTOM VIEW
SCALE: NONE

FIGURE 1

❑ FINISHED GOODS ASSEMBLY (Figure 1)

Item	Part No.	Description
1	830-0002	Apple II/II Plus Hedlock Fastener
2	810-0359	Apple II Lid
3	810-0360	Apple II Housing
4	705-0023	Apple II/II Plus Switch, Power Supply, Rocker, Two-Pole
5	705-0065	Switch, Power Supply, Rocker, Three-Pole
6	661-91205	Apple II/II Plus Motherboard, RFI, w/RAM
	661-91207	Apple II Plus Motherboard, RFI, w/RAM
7	830-0003	Apple II/II Plus PCB Standoff Fastener
8	865-0001	Apple II/II Plus Rubber Foot
9	600-0009	Apple II/II Plus Speaker Assembly
10	661-91023	Apple II/II Plus Keyboard Elec Encoder
11	710-0007	Apple II/II Plus Lamp, Bi-pin, 5V, 115A
12	661-91073	Apple II/II Plus Alps Keyboard
13	605-0133	Apple II/II Plus Keycap Set—Sculptured
	605-0119	Apple II/II Plus Keycap Set—Nonsculptured
14	661-0455	Apple II Power Supply
15	815-0835	Apple II Power-On Lens
16	825-0036	Apple II Plus Nameplate
17	830-0081	Dual Locking Keyboard Spacer
18	590-0007	Cable, Apple II/II Plus Keyboard
19	661-0259	Apple II/II Plus Mouse Assembly
20	699-8001	Rubber-Coated Mouse Ball
21	815-0409	Mouseball Retainer

❑ POWER SUPPLY CHANGED

The new power supply is 1.5" longer than the older model. The new power supply is fully interchangeable with all previous II/II Plus power supplies and may be used in any Apple II/II Plus system.

Note: Although this power supply is similar to that shipped in the Apple IIGS, the two power supplies are not interchangeable.

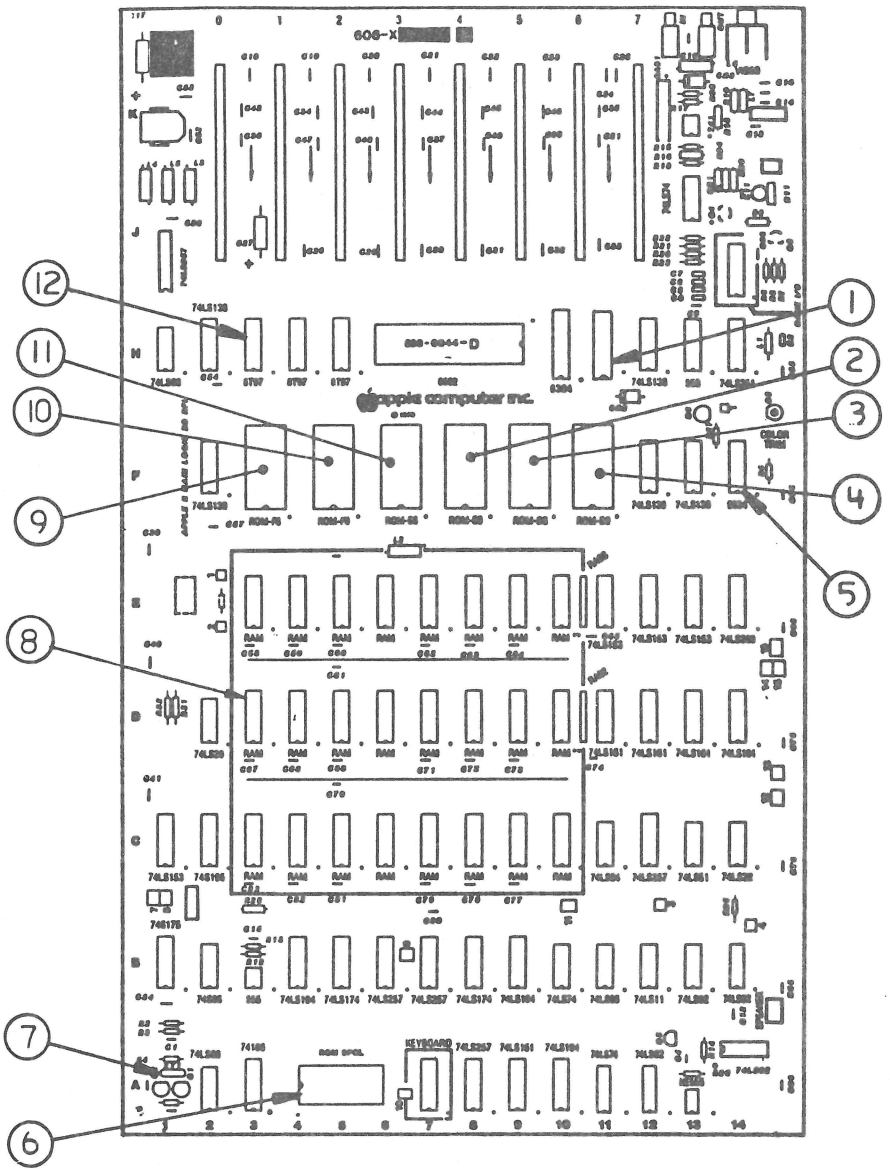

FIGURE 2

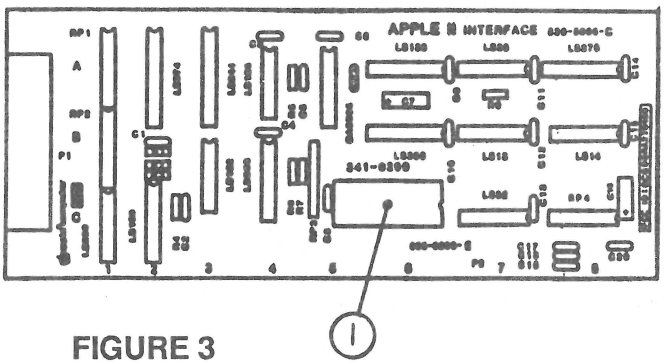

FIGURE 3

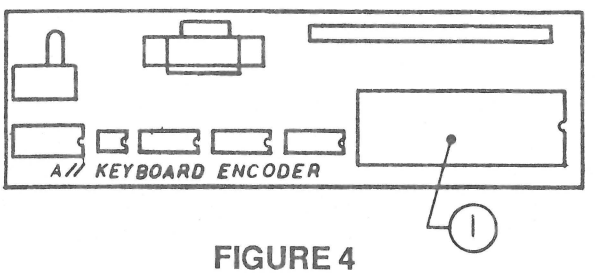

FIGURE 4

❑ MOTHERBOARD (Figure 2)

Item	Part No.	Description
1	315-0828	IC, TTL, 8T28, 3 STAT (on early AII Board)
2	341-0001	ROM 16K EO (Integer)
	341-0013	ROM 16K-1AS-EO (Applesoft)
3	341-0012	ROM 16K-1AS-D8 (Applesoft)
4	341-0016	ROM 16K-DO (Integer)
	341-0011	ROM 16K-1AS-DO (Applesoft)
5	302-9334	IC, 9334
6	341-0036	ROM, SPCL
7	197-0001	Crystal, 14.318630 MHz
8	334-0002	IC, RAM 16K
9	341-0004	ROM 16K F8 (Integer)
	342-0020	ROM Autostart F8 (Applesoft)
10	341-0003	ROM 16K F0 (Integer)
	341-0015	ROM-16K-1AS-FO (Applesoft)
11	341-0002	ROM 16K E8 (Integer)
	341-0014	ROM 16K-1AS-E8 (Applesoft)
12	315-0897	IC, TTL, 8T97, HI SP Hex 3-Stat Buffer

❑ PROFILE INTERFACE CARD (Figure 3)

1	341-0299	IC EPROM X-Meg ProFile Interface

❑ KEYBOARD ENCODER CARD (Figure 4)

1	331-0931	IC Keyboard Encoder

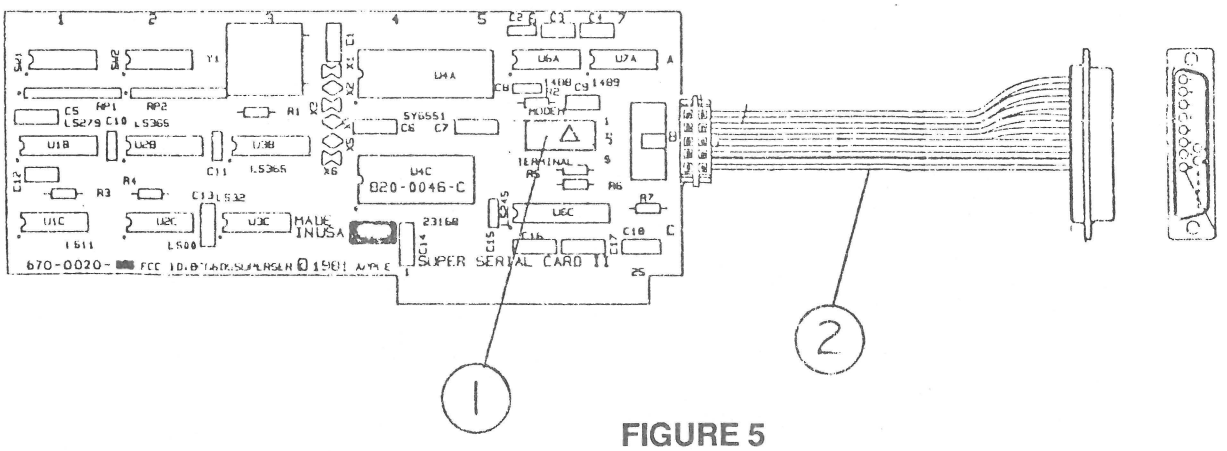

FIGURE 5

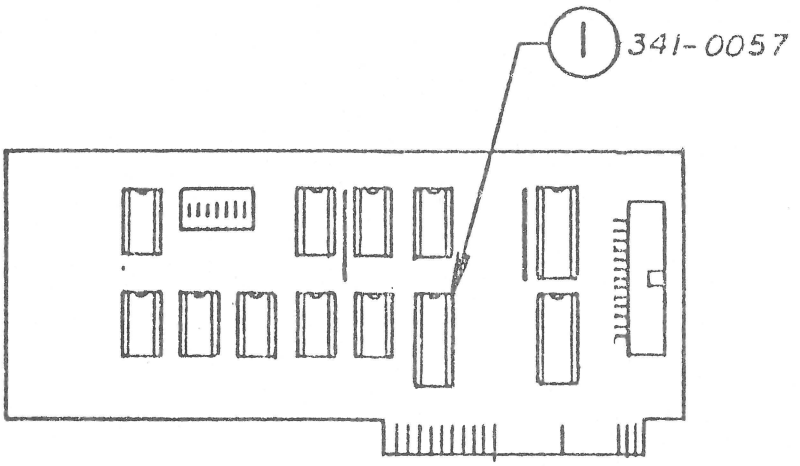

FIGURE 6

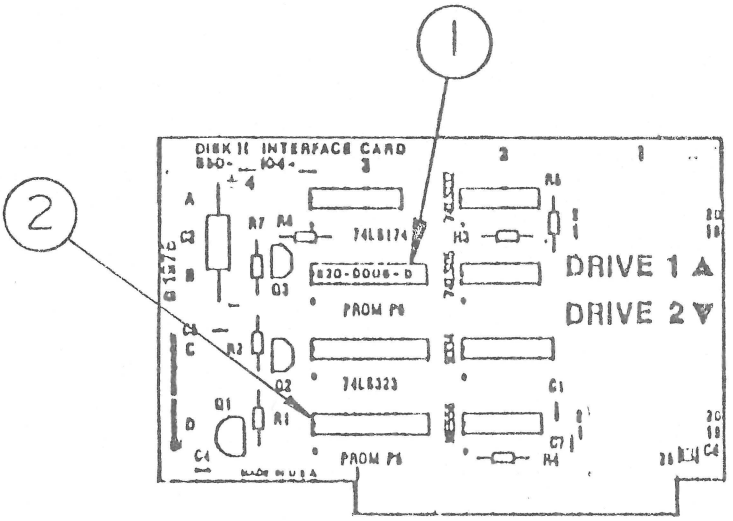

FIGURE 7

❑ SUPER SERIAL CARD (Figure 5)

Item	Part No.	Description
1	600-0008	Configuration Block SSC
2	590-0021	Cable Assy Super Serial

❑ PARALLEL PRINTER BOARD (Figure 6)

1	341-0057	ROM, Parallel Printer Boards

❑ DISK CONTROLLER CARD (Figure 7)

1	341-0028	IC, PROM STATE MACHINE P6A
2	341-0027	IC, PROM, P5A

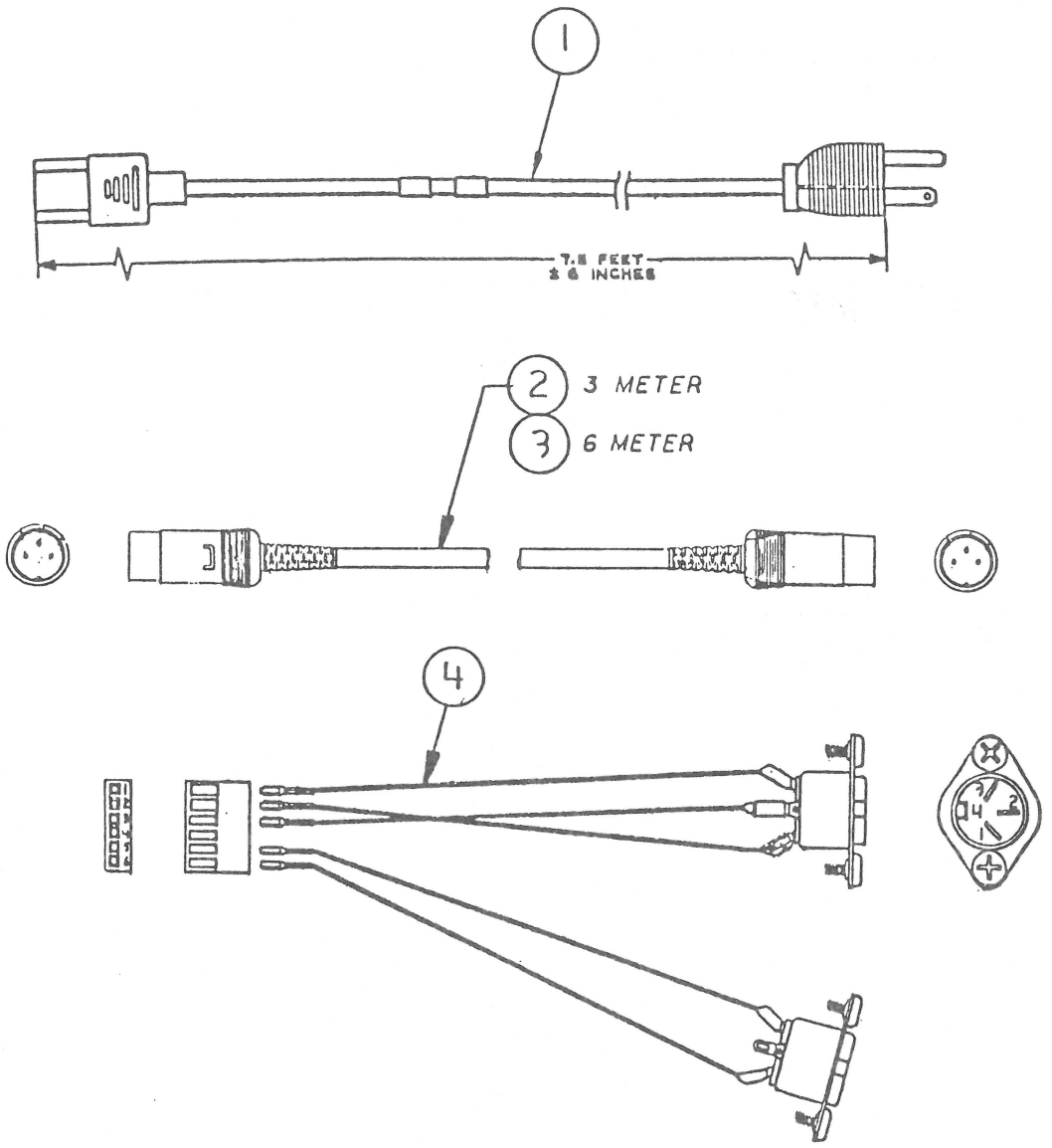

FIGURE 8

❑ CABLES (Figure 8)

Item	Part No.	Description
1	590-0003	Power Cable, AC
2	590-0127	School Bus External Cable (3 meter)
3	590-0133	School Bus External Cable (6 meter)
4	590-0126	School Bus Internal Cable

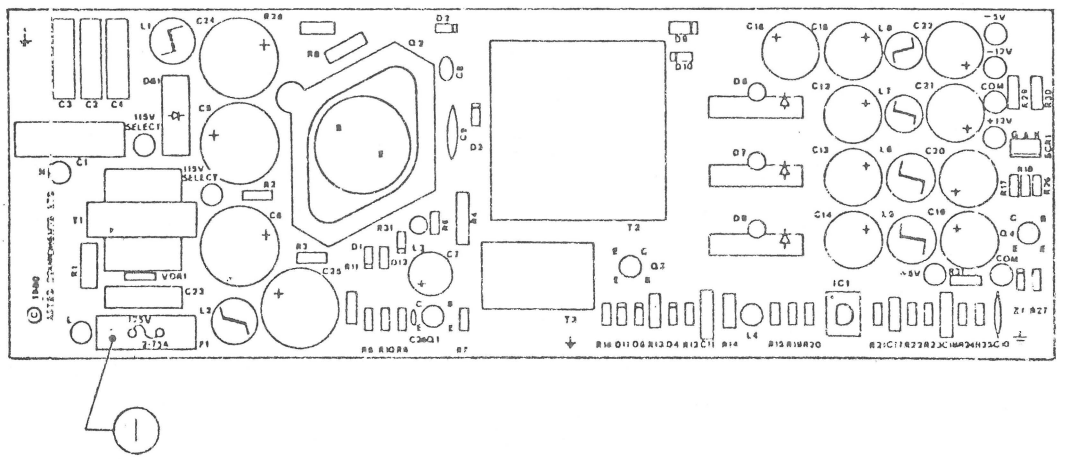

FIGURE 9

❑ POWER SUPPLY FUSE (Figure 9)

Item	Part No.	Description
1	740-0001	Fuse, Power Supply, 1A, 250V

The following keyswitches are illustrated in the Apple II product section,
Appendix A:

705-0015	Alps Short-Stem Keyswitch
705-0070	Alps Long-Stem Keyswitch
815-0772	Straight Adapter

Apple Technical Procedures

Apple II

Appendix A – Apple II Keyboard and Keyswitch Replacement

❑ CONTENTS

A.2 Identification of a Datanetics or Alps Keyboard
A.2 Procedure

Note: There are two basic types of keyboards for the Apple II: the Datanetics and the Alps. Among the Alps keyboards, there are two types: long stem and short stem. Only the Alps long stem keyboard is currently supported by Apple Computer.

The following procedure will identify Apple II keyboards. If you only want to identify a keyswitch, go to Figure 2, page A.3. To replace a keyswitch, go to **Section 3, "You Oughta Know".**

❑ IDENTIFICATION OF A DATANETICS OR ALPS KEYBOARD

Procedure

1. To identify a keyboard, expose a keyswitch by carefully prying off a keycap with a screwdriver or knife blade.

2. Before identifying the keyswitches, here are some important distinguishing features you should know: a) Only Alps short stem keyswitches have adapters, small plastic pieces that fit on the stem to make it longer. b) Alps long stem keyswitches are capped directly with the keycap. c) Datanetics keyswitches have a square collar on the middle of the stem. Refer to Figure 1 below for the differences between the Apple II keyswitches.

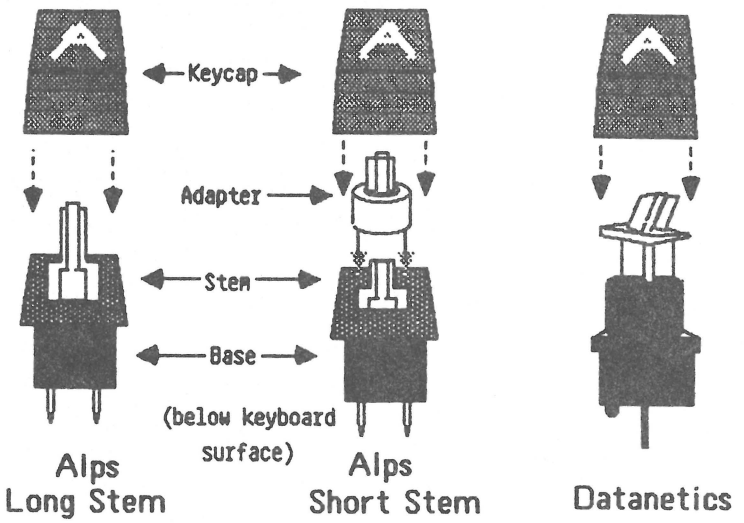

FIGURE 1

3. Now find the keyswitch on Figure 2. Then find the service part number of the appropriate keyboard in the right hand side of the table.

4. If you cannot identify the keyswitch using Figures 1 and 2, then remove the keyboard and look for the name "Datanetics" on the PCB.*

   - If you locate the word "Datanetics" on the PCB, replace the keyboard with an Alps long stem.

   - If you do not locate the word "Datanetics" on the PCB, then go to step 5.

5. Check to see if you find an adapter on the keyswitch. If there is an adapter, then the keyboard is an Alps short stem. If there is not an adapter, then the keyboard is an Alps long stem. Verify this by checking Figure 1.

* Datanetics keyboards and keyswitches are no longer supported and replacement parts can no longer be ordered.

Keyswitch	Keyboard
A. Alps Long Stem 705–0070 Alps Long Stem ("Extended")	Service Part Number of Keyboard: 661–91073
B. Alps Short Stem Adapter 705–0015 Alps Short Stem (Uses adapter 815-0182 with non-sculptured keycaps; uses adapter 815-0772 with sculptured keycaps) 815–0182 12° adapter used with short-stem keyswitches and non-sculptured keycaps 815–0772 Straight adapter used with short-stem keyswitches and sculptured keycaps (3–D View)	Service Part Number of Keyboard: * 661–74025 * 661–91021 * 661–91075
C. Datanetics Keyswitch (Obsolete) 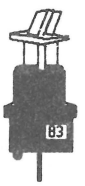 Reset (Obsolete)	Service Part Number of Keyboard: * 661–74024 * 661–91020

* These Keyboards are no longer available

Apple II

FIGURE 2

Apple Technical Procedures

Apple II

Appendix B – Apple II Power Supply Switch Replacement

❑ CONTENTS

B.3 Introduction
B.4 Requirements
B.5 Procedure
B.13 Checklist

❑ INTRODUCTION

Note: These procedures are for gold-case power supplies only. Do not attempt to repair silver-case power supplies; replace them with gold-case power supplies.

If an Apple II cannot be turned on (or off), the most probable cause is a power supply problem. You can test this by substituting a known-good power supply in the customer's Apple II; if the problem disappears, you have isolated it to the customer's power supply.

The most common cause of power supply problems is the switch. If the switch cannot be moved, or if it offers no resistance to movement, the switch is probably causing the problem. While you are replacing the switch, you can also check the fuse. The switch and fuse are the only Level 1 replaceable components.

WARNING: *Power supplies store dangerous high voltages and should always be disconnected before being serviced. Even after they are disconnected, power supplies may hold a dangerous voltage.* ***ALWAYS EXERCISE CAUTION IN REPAIRING POWER SUPPLIES: NEVER PROBE INSIDE A POWER SUPPLY UNNECESSARILY.***

Note: This repair is optional at Level 1. With the reduction in the price of the power supply exchange module, it may be more economical, depending upon your equipment and experience, to swap out defective power supplies.

Older model silver-case power supplies lack self-discharging circuits and should not be repaired in any case; always exchange them for gold-case supplies.

❑ REQUIREMENTS

Materials Required

Soldering iron (25 watt) and 63/37 rosin-core solder
Needlenose pliers
X-acto knife
Four-inch diagonal cutters ("dikes")
Heat gun
Wire stripper (preferably automatic)
Pencil eraser
Hemostats
Portable power drill, with approx. 13/64 inch (.2" or 5mm) diameter bit
Vise large enough to hold power supply
Safety goggles
1/8 inch center punch or 16 penny nail
Hammer
Small or medium Phillips screwdriver
Small flatblade screwdriver
Insulated fuse-puller or equivalent

Replacement Material and Components

Fuse, 1 AMP, 250 Volt

1. **For power supplies with a large, two-terminal switch,**

   a) Switch, Power Supply, Rocker, Two Pole (Figure 1, switch A)

   b) Shrink tubing, 1/4 inch internal diameter

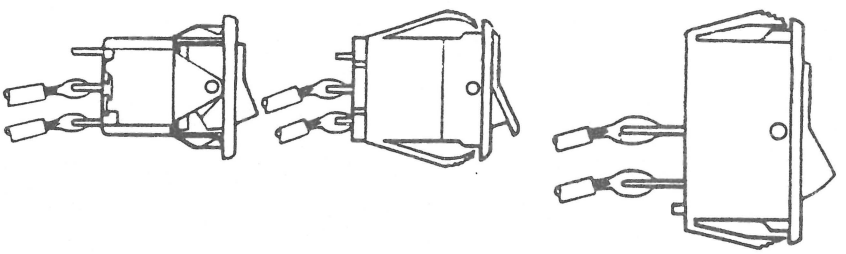

Item 1 Item 2 Item 3

FIGURE 1

2. **For those with small, three-terminal switch,**

   a) Switch, Power Supply, Rocker, Three Pole (Figure 1, switch B)

   b) Shrink tubing, 1/8 inch internal diameter

See Figure 1 for the three types of switch usually found in Apple II power supplies. The small, three-pole switch (Figure 1, switch B) is now obsolete and should be replaced with a new Switch, P.S., Three Pole (Figure 1, switch C). The large, two-pole rocker switch, (Figure 1, switch A) must be replaced by another two pole, rocker switch, (Figure 1, switch A).

❑ PROCEDURE

BEFORE YOU DO ANYTHING ELSE, take two 3/4 inch pieces of shrink tubing (1/8 inch internal diameter if working with small switch, 1/4 inch i.d. for large switch), and place or tape them onto the new switch, so that you won't forget to install them before soldering the new switch to the power supply leads.

1. **REMOVE THE POWER SUPPLY FROM THE APPLE II**

   a) Power off the Apple II and disconnect the power cord from the power supply.

   b) Unplug the power supply from the motherboard.

   c) Unscrew the power supply from the Apple II baseplate and carefully remove it from the Apple II.

2. **REMOVE THE COVER (BOTTOM PLATE) FROM THE POWER SUPPLY**

Note: Some technicians prefer to pry the switch out of the case without removing the cover. If the switch is obviously bad and you choose not to open the case, go directly to step 3.

a) Locate the two rivets that hold the bottom plate onto the power supply (Figure 2, #1).

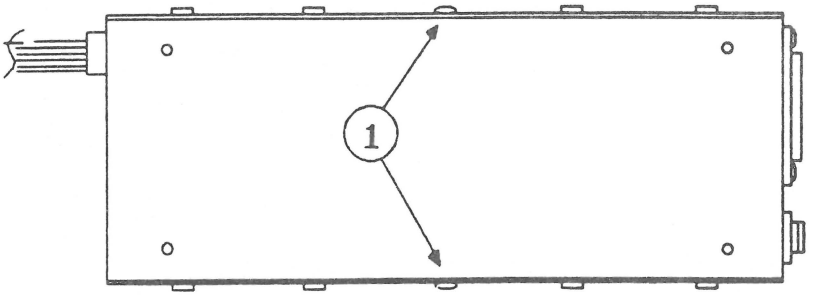

Bottom View of Power Supply

FIGURE 2

b) Clamp the power supply down firmly in the vise, so that one of the rivetted sides is facing up.

c) Insert the 13/64 inch bit into the drill chuck and secure it. Put on safety goggles to protect your eyes from metal shavings.

d) Position the drill bit in the center of the rivet, making sure the drill is aimed straight down into the rivet head. Holding it firmly so that it doesn't slip off the rivet, turn it on at a low speed and drill until the head of the rivet comes off. Do not drill all the way through the rivet or enlarge the hole in the case. Be careful not to scratch the case.

Note: If the rivet is loose and turns with the drill, place the center punch in the hole in the rivet head and hit it with the hammer. This will spread the rivet head so it will grip the hole.

e) Hold the center punch on the rivet and hit it with the hammer until the rivet falls through into the case.

f) Repeat steps d and e for the rivet on the opposite side of the case. Remove the power supply from the vise.

g) Remove the eight screws (four on each side) that hold the bottom plate on (Figure 3, #1).

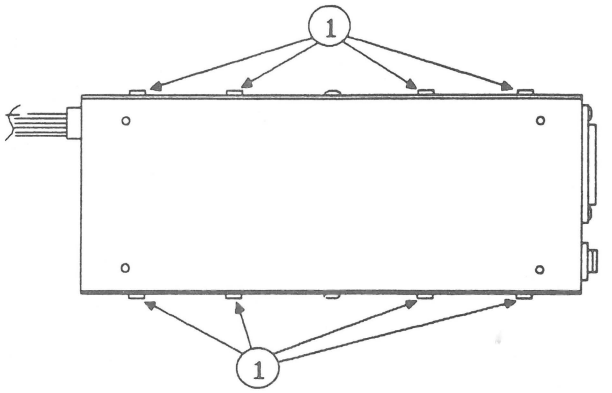

FIGURE 3

h) Pry up the bottom plate and set it aside. Be careful not to scratch the case.

i) Turn the power supply over and shake it to remove the rivet fragments. **MAKE SURE YOU FIND BOTH RIVETS.** If you can't find them, loosen (but do not remove) the screws that hold the p.c. board in place and shake until the rivets come out, but to avoid possible shock hazard, NEVER USE YOUR FINGERS TO PROBE INSIDE THE POWER SUPPLY; shake the rivets out of the case.

If you loosen the PCB screws, be sure to retighten them afterwards.

j) Check the fuse (located near the switch and the power cord plug; usually marked F1 on the p.c. board). If it has blown, use an insulated fuse puller, machinist's scribe or other **INSULATED** tool to pry up one end; then you can remove it with your fingers. (Handle it by its metal ends.) Replace it with another fuse (1 Amp, 250 Volt) and test the power supply on a known-good system. If the second fuse blows also, do not attempt further repair. Replace the power supply with an exchange module and send the defective power supply back to Apple.

3. **REMOVE THE OLD SWITCH**

a) **If you have removed the cover,** clip off the two locking tabs (Figure 4, #1) on top of the switch (use diagonal cutters); then push the switch out with your fingers. (If that doesn't work, push the lower locking tabs out of the way with a screwdriver and try pushing again.)

If you left the cover on, pry the switch out of the case (use screwdriver, assisted by needlenose pliers). Take care not to scratch the case.

b) Strip the shrink tubing (Figure 4a, #2) off the leads (i.e., wires) (use X-acto knife), taking care not to damage the insulation on the leads.

c) De-solder the leads from the switch terminals and discard the switch. (To de-solder, tin the soldering iron [i.e., put a drop of fresh solder on it] and heat the solder joint, while tugging on the switch with your free hand. When the solder melts, pull the lead free.) **HINT:** The leads are very short. If you are working with the cover on, a pair of hemostats, loosely clamped onto the leads, can simplify your job by keeping the leads steady and preventing them from falling back into the case.

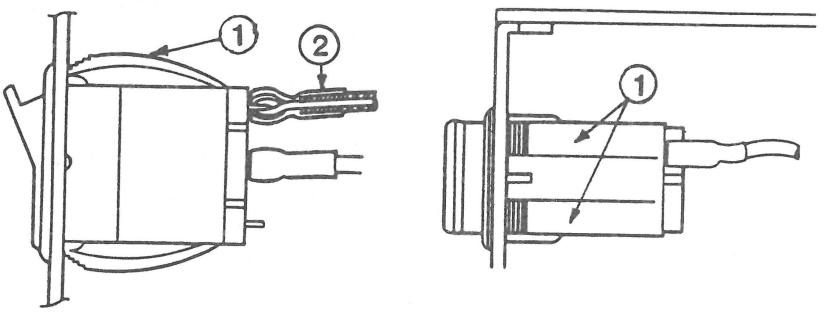

(a) Side View **(b) Top View**

FIGURE 4

4. **CLEAN AND PREPARE THE LEADS**

a) Clean excess solder from the leads (use soldering iron: either tap it off or draw it off onto the iron).

Note: IF THE LEADS ARE VERY SHORT AND AWKWARD TO WORK WITH, REMOVE THE COVER FROM THE POWER SUPPLY, AS IN STEP 2 ABOVE. IF THEY ARE TOO SHORT TO CONNECT TO THE NEW SWITCH, REPLACE THE POWER SUPPLY.

b) Clip off any badly frayed part of the ends of the leads. (Cut off no more than necessary.)

c) Strip wires to obtain 1/4 inch of stripped wire on each lead. Twist ends to prevent fraying.

d) Tin the end of each lead.

e) Slip a one-inch piece of heat-shrink tubing on each lead, and slide it back as far as possible (to prevent heat damage while you are soldering).

f) Shape the end of each lead so that it will fit through the terminal of the new switch (use needlenose pliers).

5. **INSTALL THE NEW SWITCH**

a) **THREE-TERMINAL SWITCH:** Thread either lead through the hole in either outside terminal and crimp it with the pliers, so that the lead forms a loop around the end of the terminal (Figure 5). Attach the other lead to the middle terminal in the same way.

- The open terminal will now mark the "ON" side.Orient it toward the top of the case. (See Figure 6.-next page- If you are working with the cover off, the case will be upside down.)

TWO-TERMINAL SWITCH: Clean the terminals of the switch with an eraser; then tin them. Then thread one lead through each terminal and crimp it with pliers, to form a loop around the end of the terminal as in Figure 5.

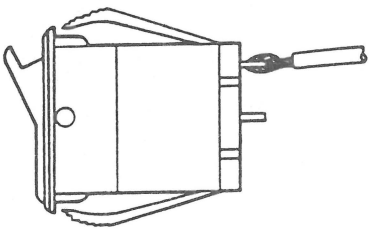

FIGURE 5

- Make sure that "ON" (marked on the switch) is toward the top of the case. (If you are working with the cover off, the case will be upside down: see Figure 6.)

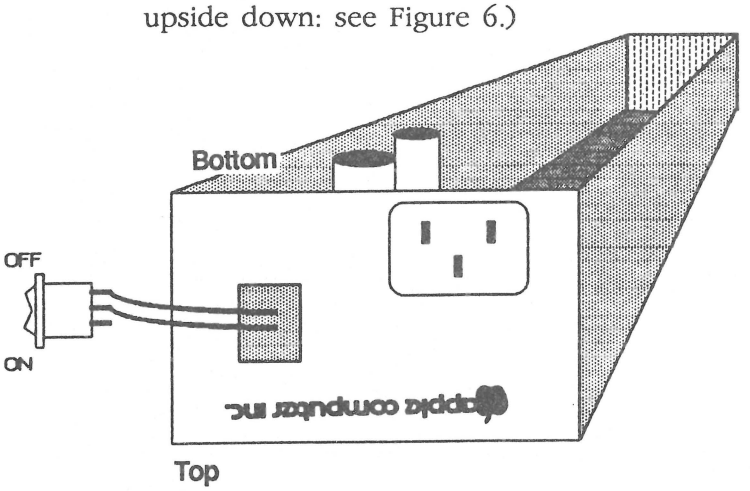

FIGURE 6

b) Solder the leads to the terminals. To avoid damaging the switch, do not apply the soldering iron to the switch for more than 20 seconds.

c) Check your solder joints. (See Figure 7 for examples of good and bad solder joints.)

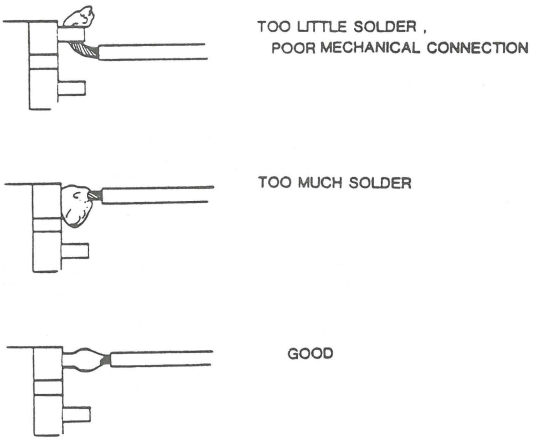

FIGURE 7

d) After the solder has cooled, slip the shrink tubing down both leads, making sure that it covers both terminals completely and overlaps the insulation on the leads. Heat the tubing with the heat gun until it has shrunk to a tight covering around each terminal and lead.

e) Make sure the "ON" side of the switch (the open terminal of the three-terminal switch) is toward the top of the case, and push the switch into its slot in the case until it seats itself firmly. (See Figure 8.)

Top

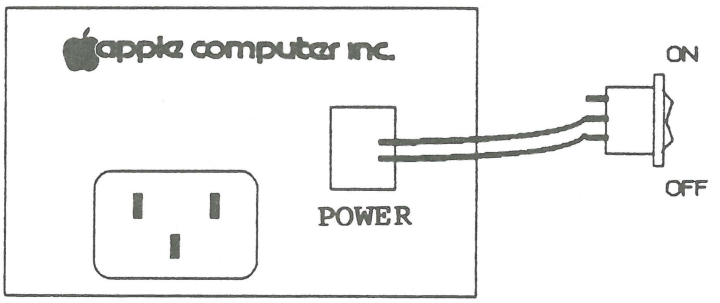

Bottom

FIGURE 8

6. **REPLACE THE COVER**

   a) If you removed the cover, turn over the power supply and shake it to remove loose objects, metal shavings, etc. Inspect visually for excess solder droplets, etc., and remove any you find. (A brush, vacuum or air gun might be helpful.)

   b) Replace the cover and fasten it with the eight screws. DO NOT REPLACE THE RIVETS.

7. **TEST THE REPAIR**

   a) Plug the repaired power supply into the motherboard of a known-good Apple II (NOT the customer's).

   b) Make sure the power supply switch is set to "OFF". Connect the power cord to the power supply, then to the wall.

   c) Turn on the power supply. If the power light goes on and the Apple II tries to boot, the repair was successful. Replace the power supply in the customer's Apple II and return the system to the customer.

If the repair was not successful, swap power supplies for the customer and send the customer's power supply to Apple.

❑ CHECK LIST

Use this checklist as an on-the-job reminder. For detailed explanations of any steps, refer to the procedures on the preceding pages.

1. Equipment ready?
   a) Switch
   b) Medium flatblade screwdriver
   c) Needlenose pliers
   d) X-acto knife
   e) Four-inch diagonal cutters ("dikes")
   f) Heat gun
   g) Shrink tubing
   h) Wire stripper (preferably automatic)
   i) Soldering iron (25 watt)/63/37 rosin-core solder
   j) Hemostats
   k) Small or medium Phillips screwdriver
   l) Drill with 13/64 inch (5mm) bit
   m) Safety goggles
   n) Center punch or 16-penny nail
   o) Hammer
   p) Eraser
   q) Fuse-pulling tool (insulated)
   r) Fuse
2. Remove power supply.
3. Open case and check fuse. (Optional)
4. Pry out switch.
5. De-solder and prepare leads.
6. **Put shrink tubing on leads.**
7. Solder leads to new switch. (See Figure 8 for orientation of 3-pole switch.)
8. **Position shrink tubing over solder joints-apply heat.**
9. Pop switch in.
10. Shake out case (if open).
11. Replace cover; do not replace rivets.
12. **Test on Apple II (NOT THE CUSTOMER'S).**

Apple Technical Procedures

Apple II/II Plus

Appendix C – Apple II/II Plus Language Card

❑ CONTENTS

C.2 Introduction
C.2 New Version

❑ INTRODUCTION

There are two versions of the Language Card for the Apple II Plus.

- The original version was installed in slot 0, and the cable replaced the RAM at location E3 on the logic board. This version worked with both the Apple II and the II Plus.
- The new version is installed in slot 0 with no cable connection necessary.

New Version

The new version of the language card

- Has only three IC's on the board
- Has no cable connection from the card to socket E3 on the logic board
- Does not have the Autostart ROM built-in

To correct the differences

- A RAM has been enclosed with the new language card. Install the RAM at coordinate E3.
- If the ROM at location F8 is 341-0004, the customer may want to have the Autostart ROM (341-0020) installed. The Autostart ROM must be installed to maintain the same functionality provided by the old language card.

Apple Technical Procedures

Apple III/III Plus

Technical Procedures

❑ TABLE OF CONTENTS

Section 0 – Service Notes	0.4	Memory and Logic Board Exchanges
	0.4	Automatic Upgrades
	0.4	Returning Logic Boards: Removing Video Interlace ROM
	0.4	Installing Logic Boards: Removing Foam
	0.4	Power Supply Cables
Section 1 – Take-Apart	1.3	Removing the Cover
	1.3	Replacing the Cover
	1.5	Removing the Analog Board
	1.7	Replacing the Analog Board
	1.9	Removing the Disk Assembly
	1.9	Replacing the Disk Assembly
	1.11	Removing the Keyboard
	1.11	Replacing the Keyboard
	1.13	Removing the Power Supply
	1.13	Replacing the Power Supply
	1.15	Removing the Main Logic Assembly
	1.17	Replacing the Main Logic Assembly
Section 2 – Diagnostics (Apple III Only)	2.3	Diagnostics Setup
	2.3	Diagnostics Menu
	2.4	Making Test Diskettes
	2.5	Test All
	2.5	Video Tests
	2.7	Sound Tests
	2.7	Disk Test
	2.8	Keyboard Tests
	2.9	ROM Test
Section 3 – Troubleshooting	3.3	Using the Diagnostic Flowchart
	3.4	Lettered Boxes of the Flowchart
	3.9	ProFile Problems with the Apple III

Section 4 – Modifications	4.2	Installing the Apple III Clock Kit
	4.4	Setting the Apple III Clock
	4.6	Adjusting the Apple III Clock Speed
	4.10	256K RAM Upgrade
	4.12	Apple III Keyboard Replacement
Section 5 – Diagnostics (Apple III Plus Only)	5.3	Introduction
	5.3	Diagnostics Setup
	5.3	Diagnostics Menu
	5.4	Make Test Disks (Diskettes)
	5.5	RAM Test
	5.6	ROM Test
	5.6	Calender/Clock Test
	5.6	Disk Test
	5.7	Keyboard Tests
	5.9	Sound Tests
	5.10	Video Tests
	5.13	Test All
Section 6 – Illustrated Parts List	6.3	Finished Goods Assembly
	6.5	Universal Parallel Printer Boards
	6.5	Logic Board
	6.5	Memory Board
Appendix A	A.1	Apple III Keyboard/Keyswitch Identification

Note: These Technical Procedures apply to both the Apple III and Apple III Plus (unless otherwise noted).

©Apple Computer, Inc., 1982-1988. No portion of this document may be reproduced in any form without the written permission of Apple Computer, Inc.

Apple and the Apple logo are registered trademarks of Apple Computer, Inc.

Apple /// Technical Procedures

Section 0

Apple /// Service Notes

Contents:

Memory and Logic Board Exchanges
  Automatic Upgrades..... 0.4
  Returning Logic Boards: Removing Video Interlace ROM....0.4
  Installing Logic Boards: Removing Foam.....0.4
Power Supply Cables.....0.4

APPLE /// MEMORY AND LOGIC BOARD EXCHANGES

Automatic Upgrades

The 256K 5V Memory Board and the 5V Apple /// Logic Board are the only mdules now available from Apple for purchase or exchange.

Because of this:

- All Apple 12V systems and 128K 5V systems will be upgraded to 256K 5V systems for a nominal charge when a Memory Board or a 12V Logic Board fails.

- If one board in a 12V system fails, both boards (Logic and Memory) will have to be replaced.

IMPORTANT: All 5V Memory Boards are to be returned WITH RAM. The exchange modules come fully stuffed with 256K of RAM.

Returning Logic Boards: Removing Video Interlace ROM

Before returning an Apple /// Logic Board for exchange, you must remove and keep the video interlace ROM (if present). The ROM (P/N 342-0145) is at location F5 on the Logic Board. The exchange board will not include this ROM.

Installing Logic Boards: Removing Foam

The Apple /// Logic Board is shipped with a piece of black foam taped to the bottom of the board to protect the encoder chip. Be sure to remove the black foam before installing the Logic Board. Failure to do so can cause damage to the encoder chip and/or the Logic Board.

POWER SUPPLY CABLES

There are two types of power supply cable connectors: one has two rows of four pins, and the other has one row of ten pins. Check which type of connector is on the logic board before ordering the cable. The one row with ten pins requires the part listed as **Cable, Power Supply to Apple /// Logic Board.** The two rows with four pins requires the part listed as **Cable, Power Supply RFI Apple /// Plus.**

Apple /// Technical Procedures

Section 1

Take-Apart

Contents:

Removing the Cover.....1.3
Replacing the Cover.....1.3
Removing the Analog Board.....1.5
Replacing the Analog Board.....1.7
Removing the Disk Assembly.....1.9
Replacing the Disk Assembly.....1.9
Removing the Keyboard.....1.11
Replacing the Keyboard.....1.11
Removing the Power Supply.....1.13
Replacing the Power Supply.....1.13
Removing the Main Logic Assembly.....1.15
Replacing the Main Logic Assembly.....1.17

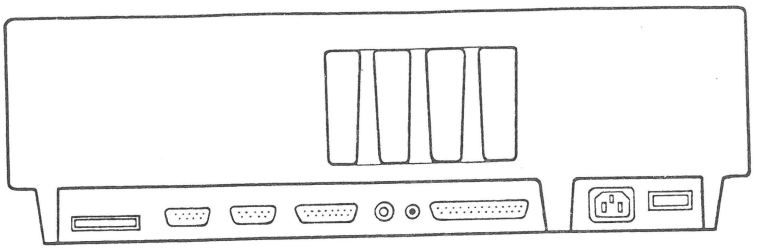

FIGURE 1

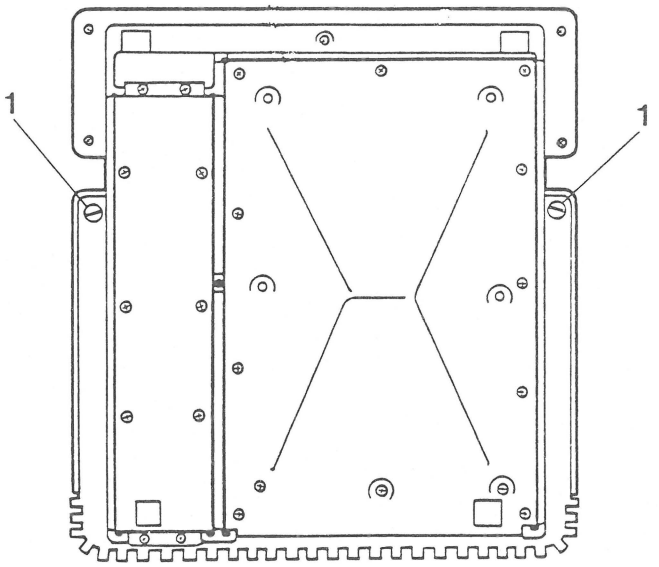

FIGURE 2

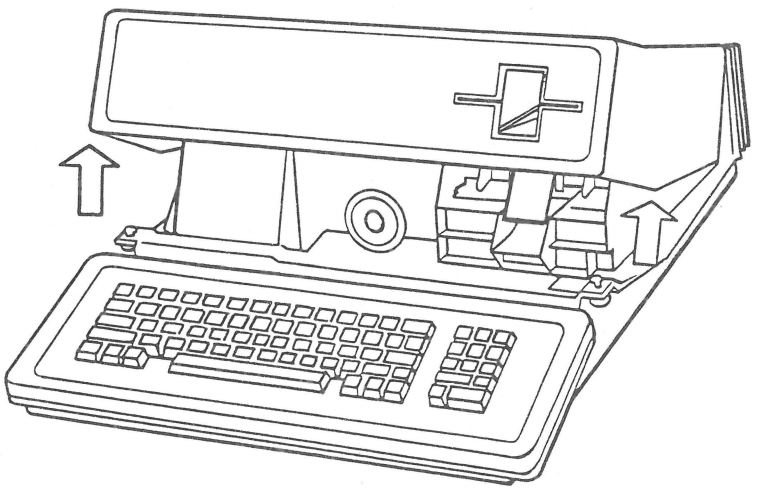

FIGURE 3

A. REMOVING THE COVER

1. Power down and disconnect the AC power cord from the source and then from the back of the Apple ///.

2. Disconnect all other external cables from the back of the Apple ///. (See Figure 1).

3. Lift up the front edge of the Apple and tip it up so it rests on the back of the casing.

4. Use a flat blade screwdriver to turn the locking screws, one on each side of the Apple III, 1/4 turn counterclockwise. (See Figure 2, Item 1).

   DO NOT REMOVE THESE SCREWS--they are self-capturing and are supposed to stay in.

5. Lower the Apple /// to the operating position and with a hand on each side, lift the cover up and pull it forward to remove it. (See Figure 3).

B. REPLACING THE COVER

1. With the Apple /// in operating position, place the cover on making sure that it is seated properly all the way around. Be sure that the four tabs on the back of the cover fit into the four slots in the back of the Apple.

2. Tip up the front edge of the Apple and tighten the two locking screws by turning them 1/4 turn clockwise.

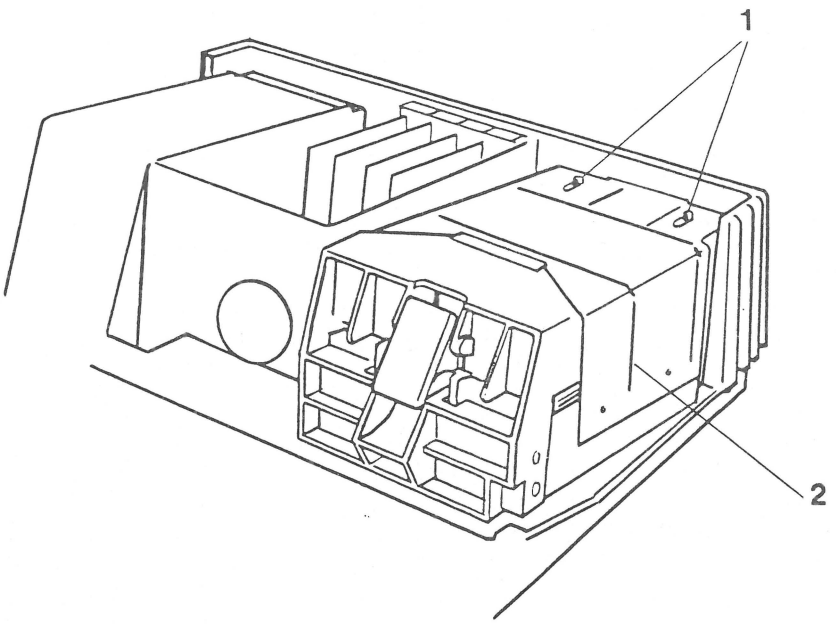

FIGURE 4

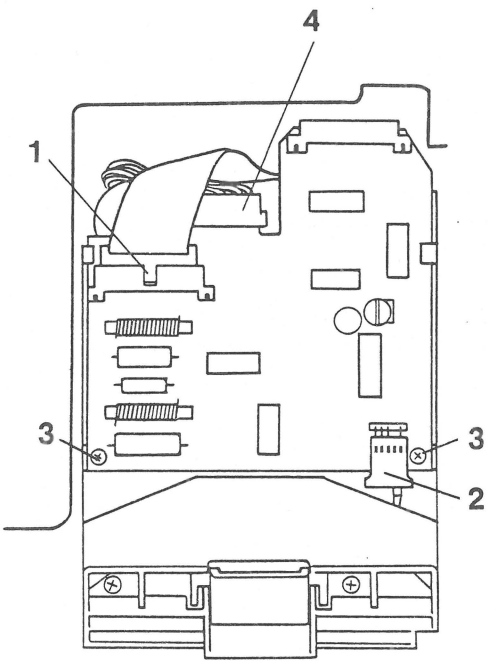

FIGURE 5

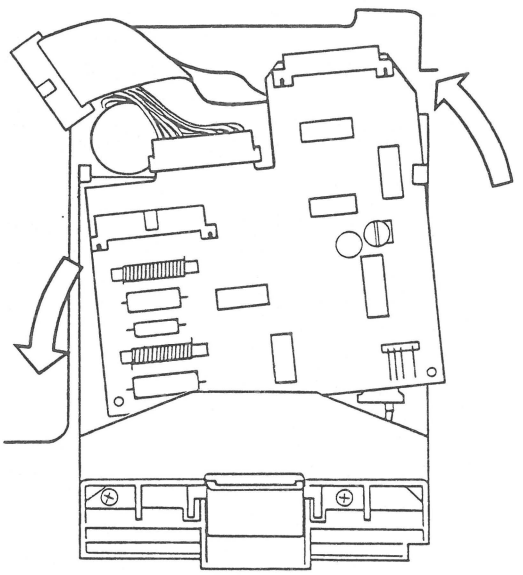

FIGURE 6

C. REMOVING THE ANALOG BOARD

1. Remove the cover.

2. To get to the analog board you must first remove the disk assembly shield. To do this, use a flat blade screwdriver to slide the two Tinnerman retaining clips on the disk assembly shield forward. (See Figure 4, Item 1).

   NOTE: The clips should come off easily. However, they sometimes fly so you should keep a finger on them.

3. Remove the disk assembly shield by flexing the side out (See Figure 4, Item 2) and lifting up on the shield.

   The shield is only retained by the spring tension of the sides and four dimples which fit into depressions of the disk casting.

4. Disconnect the disk ribbon cable. If it is hard to remove, work it off by pushing on the center tab or the sides of the plug with a small screwdriver. DO NOT PULL IT OUT BY THE CABLE! (See Figure 5, Item 1).

5. Disconnect the read/write head cable. (See Figure 5, Item 2).

   NOTE: Do not try to remove the motor control cable yet. (see Figure 5, item 4).

6. Remove the two small Phillips head mounting screws which hold the analog board at the front of the casting. (See Figure 5, Item 3).

7. Remove the analog board by gently twisting it counterclockwise and moving it forward until it clears the guide on the left. Unhook it from the guide on the right. (See Figure 6).

8. Remove the motor control plug (Figure 5, Item 4) by disengaging the four nylon locking pawls which engage the two holes in the board from both top and bottom. Lift the pawls free and disconnect the motor control cable.

D. REPLACING THE ANALOG BOARD

1. Connect the motor plug. Make sure the nylon pawls are engaged in the holes.

2. Turn the board slightly counterclockwise and hook the board under the right retainer and then the left retainer.

3. Replace the two screws in front.

4. Replace the disk ribbon cable.

5. Replace the read/write head cable.

6. Replace the disk assembly shield.

7. Replace the Tinnerman clips by putting them over the posts and sliding them back. Use a screwdriver to press down firmly on the sides of the clips to secure them.

8. Replace the cover.

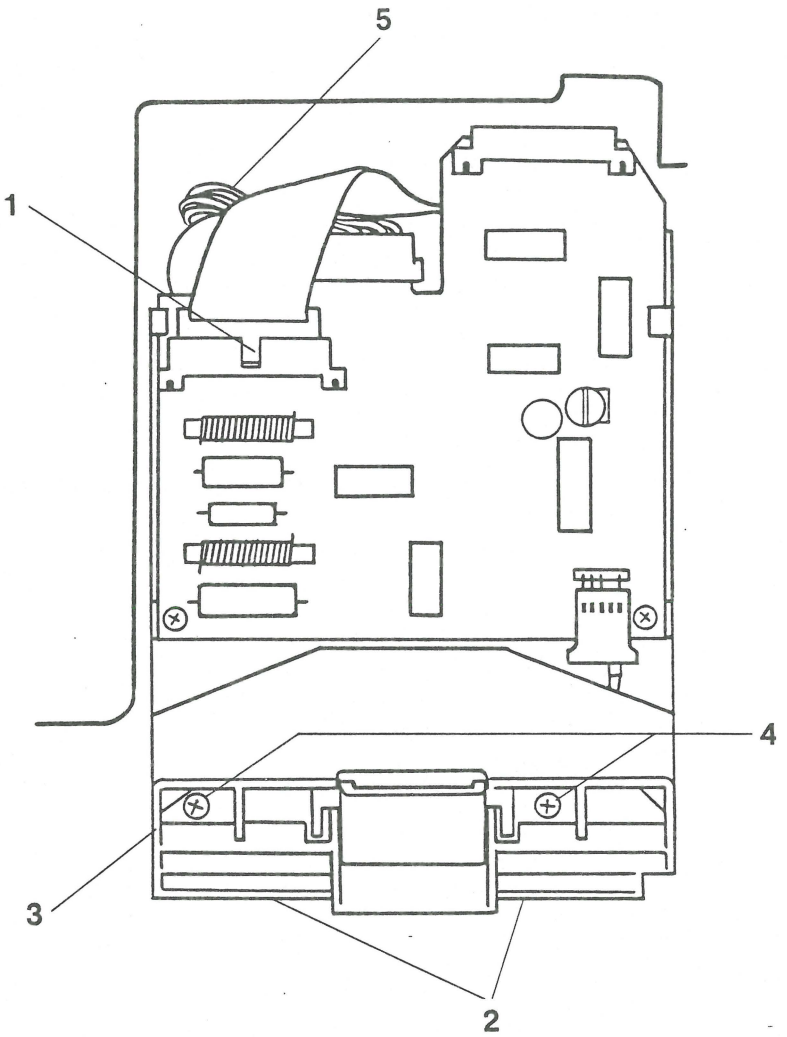

FIGURE 7

E. REMOVING THE DISK ASSEMBLY

1. Remove the cover.

2. Remove the Analog card.

3. Draw a pencil line on the Apple III chassis along the front (See Figure 7, Item 2) and left side (Figure 7, Item 3) of the disk assembly bezel. This will serve as a location reference when the disk assembly is re-inserted.

4. Loosen completely (but don't remove yet) the two Phillips head screws that mount the disk assembly to the Apple /// chassis. They can be seen by looking down through the front diskette guide and door assembly. (See Figure 7, Item 4).

5. Loosen but don't remove the screw in the double retaining clip that secures the back of the disk assembly. (See Figure 7, Item 5).

6. Remove the assembly by sliding it forward until it clears the retaining clip. Lift it from the chassis.

7. Recover the two front screws from the disk assembly.

F. REPLACING THE DISK ASSEMBLY

1. Slip the disk assembly under the double retaining clip so that the front is in line with the pencil line you drew earlier.

2. Replace the two front screws.

3. Tighten the retaining clip screw in the back.

4. Replace the Analog card.

5. Replace the cover.

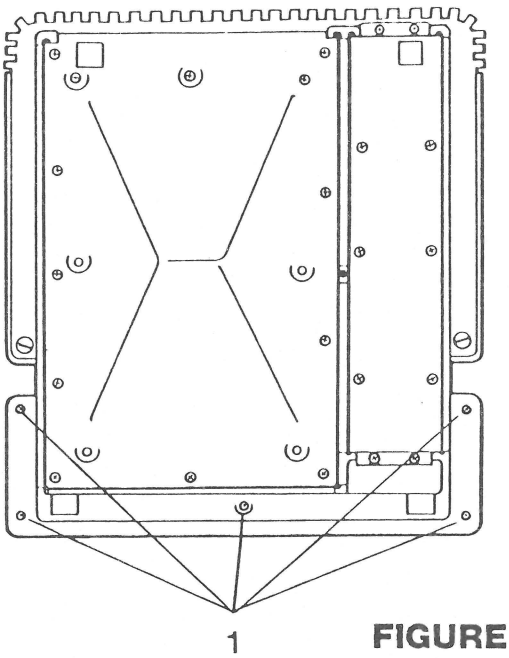

FIGURE 8

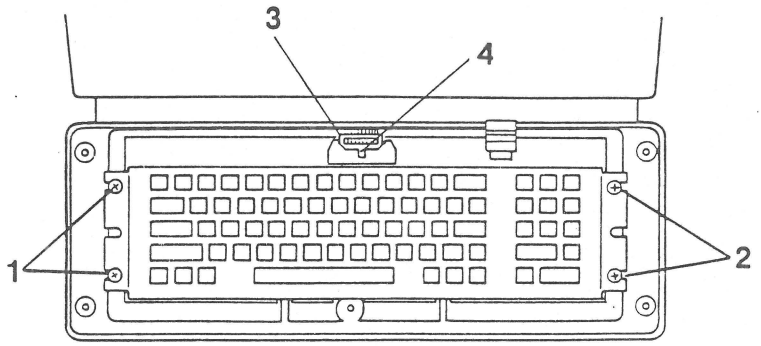

FIGURE 9

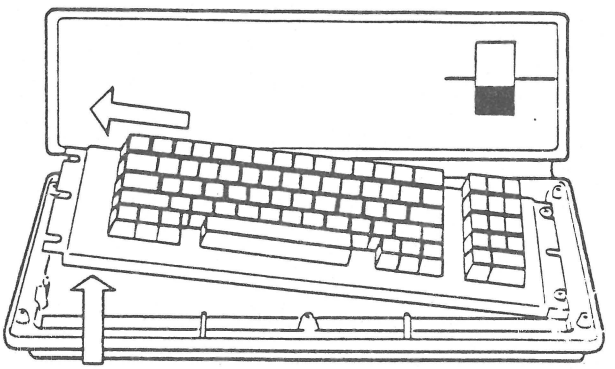

FIGURE 10

G. REMOVING THE KEYBOARD

1. Check to see that the power is off on the Apple /// and that the AC power cord is disconnected.

2. Turn the Apple completely over.

3. Remove the five keyboard cover mounting screws. (See Figure 8, Item 1).

4. Remove the keyboard cover.

5. Turn the Apple rightside up again.

6. Remove the two retaining screws on the left end of the keyboard. (See Figure 9, Item 1).

7. Loosen but don't remove the two retaining screws on the right. (See Figure 9, Item 2).

8. Remove the keyboard by lifting the left end and sliding the right end from under the loosened screws. (See Figure 10).

9. Disconnect the keyboard cable (See Figure 9, Item 3) by using a screwdriver to push on the tab or the sides of the cable connector (See Figure 9, Item 4).

   CAUTION: Do not pull on the cable!

H. REPLACING THE KEYBOARD

1. Replace the keyboard cable. Make sure it wraps tightly around the printed circuit board and does not stick out.

2. Replace the keyboard.

3. Replace the two retaining screws on the left end of the keyboard.

4. Tighten down the two screws on the right side of the keyboard.

5. Replace the keyboard cover.

6. Tip the Apple /// up, keeping one hand on the loose keyboard cover.

7. Carefully replace the five keyboard cover mounting screws. Don't overtighten them because they are just threaded into the plastic of the cover and will strip very easily.

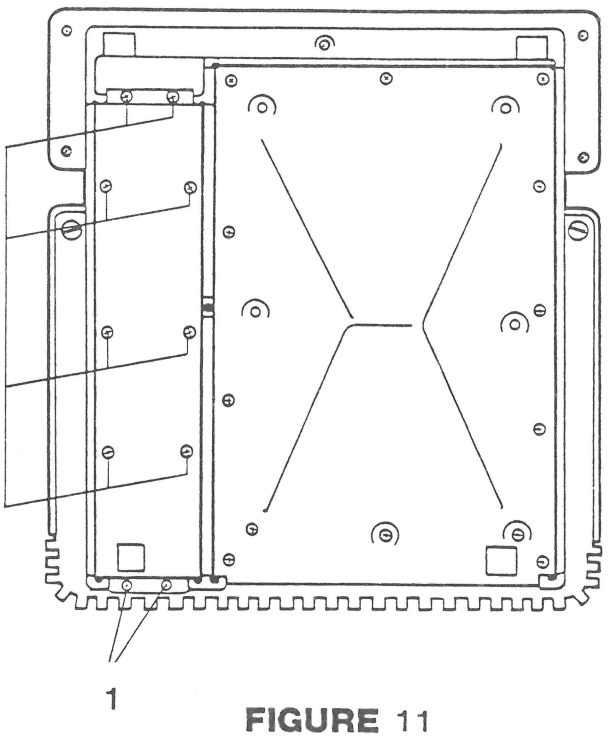

FIGURE 11

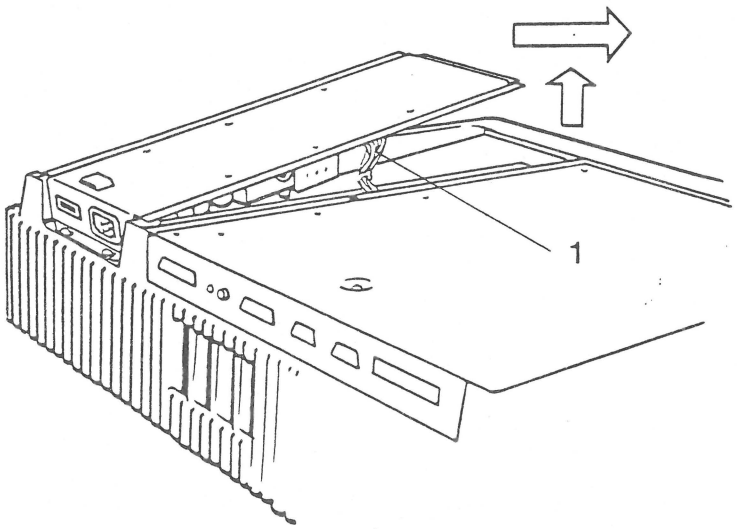

FIGURE 12

I. REMOVING THE POWER SUPPLY

1. Make sure that the power is off on the Apple /// and that the AC power and all other external cables are disconnected.

2. Turn the Apple upside down with the back facing you, putting it on a soft pad.

3. Loosen but don't remove the two Phillips head screws located on the rear edge of the power supply bottom cover, near the on/off switch and power supply receptacle. (See Figure 11, Item 1).

4. Completely loosen the eight screws that secure the power supply to the chassis. Do not try to take them out (See Figure 11, Item 2).

5. Lift up the edge of the power supply and slide it until it clears the two rear mounting screws. Lift the power supply out. (See Figure 12).

6. Turn the power supply over.

7. Disconnect the power supply connector by squeezing in on the tabs and gently (with a rocking motion) pull the connector out. (See Figure 12, Item 1).

8. If there is a wire tie holding the cable, clip it.

J. REPLACING THE POWER SUPPLY

1. Place a new wire tie on the cable.

2. Plug in the cable connector.

3. Replace the power supply. Slide the cover under the two rear screws and lower the power supply into place.

4. Tighten down all the screws. BE CAREFUL! DON'T FORCE THE SCREWS! If excessive force is applied, the screws will strip out the chassis. Make sure the screws are not crossthreaded. If one doesn't go in easily, back it out and try again.

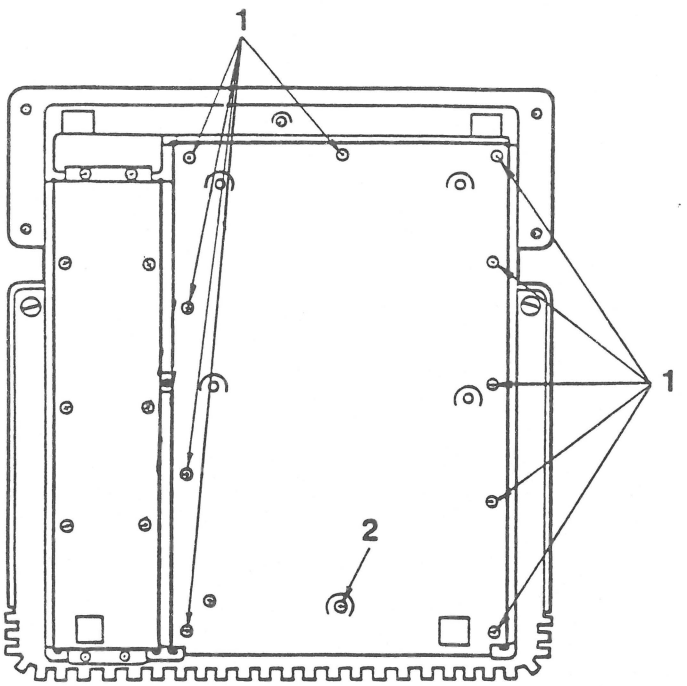

FIGURE 13

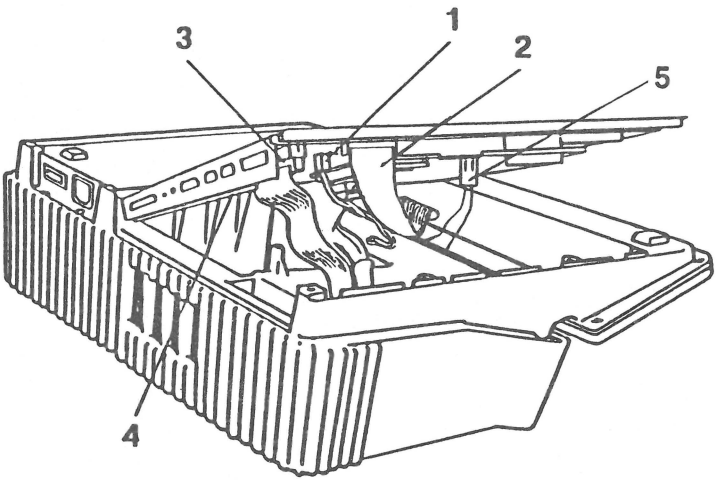

FIGURE 14

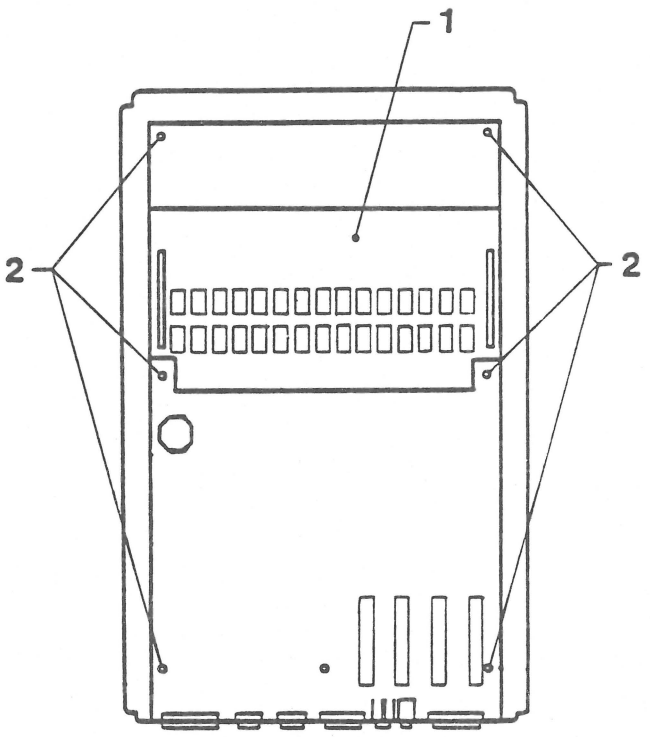

FIGURE 15

K. REMOVING THE MAIN LOGIC ASSEMBLY

1. Make sure that the power on the Apple is off and that all external cables are disconnected.

2. Tip the Apple /// on its side.

3. Loosen the two locking screws that hold the cover on.

4. Remove the cover.

5. Remove any peripheral cards installed in slots 1 - 4.

6. Put the Apple cover back on to protect the disk bezel.

7. Place the Apple upside down and put it on a pad with the rear facing you.

8. Remove the ten Phillips screws around the edge of the logic access panel. (See Figure 13, Item 1.)

9. Remove the additional recessed screw that is about one and a half inches in from the rear edge of the panel. (See Figure 13, Item 2).

10. Lift up the logic board carefully from the right side. Allow the panel to remain resting on its edge nearest the power supply. (See Figure 14.)

11. While holding the logic board on the underside, disconnect the clock/calendar cable, if present (Figure 14, Item 5) the speaker cable (Figure 14, Item 1), the keyboard cable (Figure 14, Item 2), and the disk drive cable (Figure 14, Item 3). Note which plug goes where.

    NOTE: The clock/calendar is optional on the Apple /// but standard on the Apple /// Plus.

12. Lift the assembly so that you can unplug the power supply plug. (Figure 14, Item 4).

13. Lift out the logic assembly.

14. Place the logic assembly flat on the work surface. Using both hands, lift off the memory board (See Figure 15, Item 1) from the main logic board (Motherboard).

    NOTE: Lift the memory board straight up so that the male connector pins mounted on the main logic board will not be bent or broken.

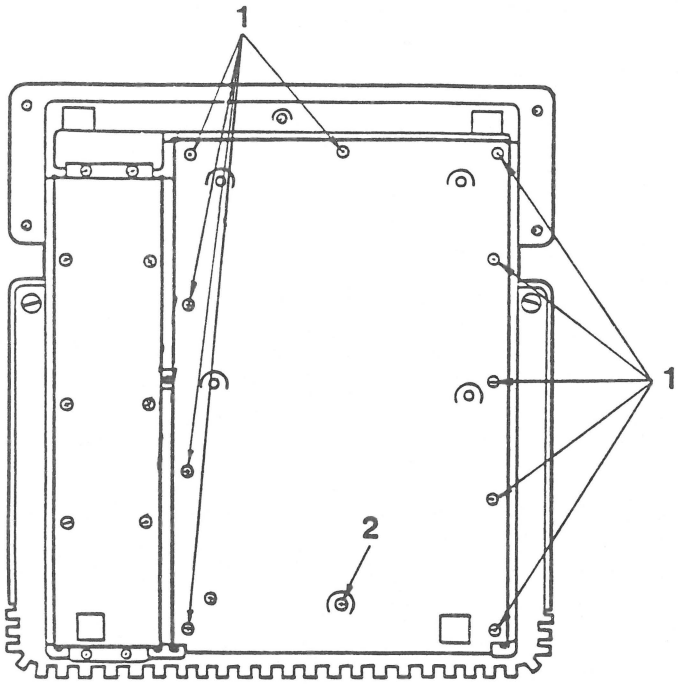

FIGURE 13

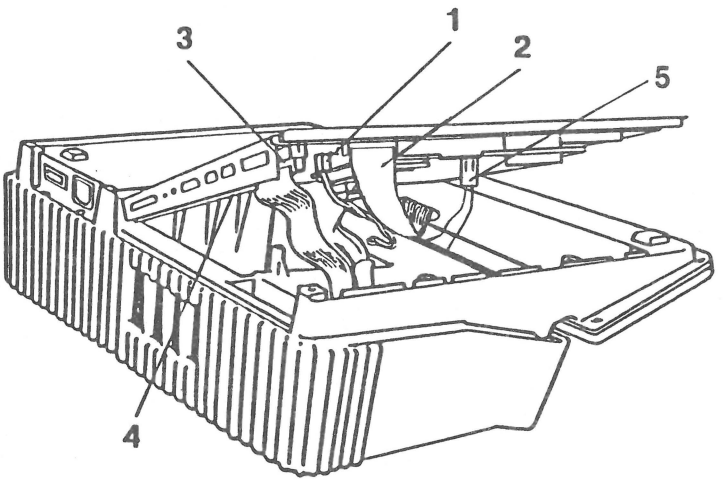

FIGURE 14

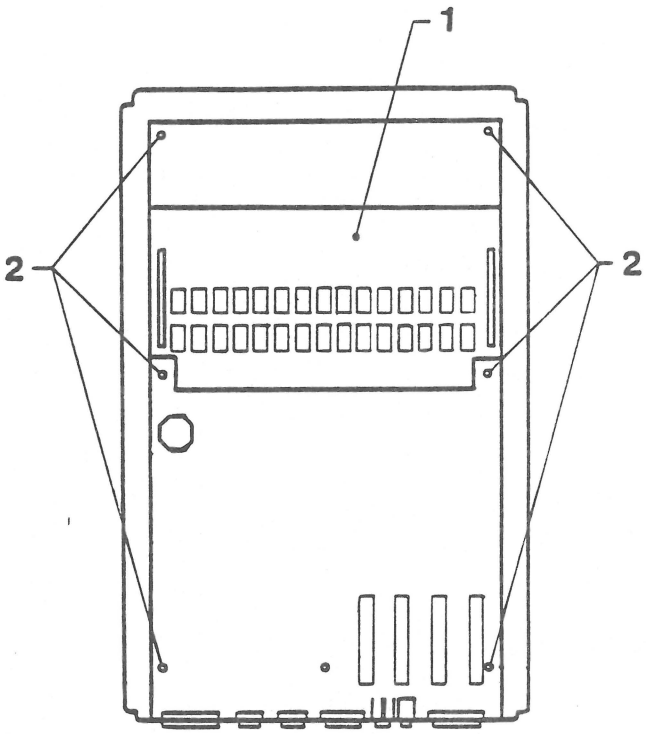

FIGURE 15

15. Remove the six retaining screws on the main logic board. (See Figure 15, Item 2).

16. Ease the main logic board forward so that the peripheral connectors slip out of their cutouts.

17. Remove the main logic board.

    NOTE: Be sure to remove the clock chip (location B3) and the battery adapter and clamp prior to returning the main logic board for exchange. Refer to "Installing the Apple /// Clock Kit" in **Section 4, Modifications,** for the location of these components.

L. REPLACING THE MAIN LOGIC ASSEMBLY

NOTE: See **Section 0, Apple /// Service Notes** for module exchange information.

1. Make sure that the insulating shield (present only on early models of the Apple ///) is in place to keep the board from shorting on the access panel.

2. Replace the main logic board by slipping the peripheral connectors into their cutouts in the rear access panel, and then replacing the retaining screws with the screwdriver (Figure 15, Item 2).

3. Replace the memory board (Figure 15, Item 1), making sure memory board is properly oriented. (The RAM chips on the memory board point in the opposite direction to the chips on the main logic board. The notches on the memory board IC's should be facing the output connectors.)

   Align the end pin in the end hole of the memory board and then tip the board flat. When all pins are properly started, press the board gently but firmly into place.

4. Rest the access panel on the power supply side and reach under and plug in the power supply (Figure 14, Item 4).

5. Plug in the speaker cable (Figure 14, Item 1).

6. Plug in the keyboard cable (Figure 14, Item 2).

7. Plug in the disk cable (Figure 14, Item 3).

8. Plug in clock/calendar cable, if present (Figure 14, Item 5).

9. Put the entire logic assembly panel in place and tighten down the 11 Phillips screws on the logic assembly access panel. (See Figure 13, Items 1 and 2).

10. Turn the Apple /// rightside up.

11. Remove the cover.

12. Replace the peripheral cards.

13. Replace the cover.

Apple /// Technical Procedures

Section 2

Diagnostics

Contents:

Diagnostics Setup..... 2.3
Diagnostics Menu.....2.3
Making Test Diskettes.....2.4
Test All.....2.5
Video Tests.....2.5
Sound Tests.....2.7
Disk Test.....2.7
Keyboard Tests.....2.8
ROM Test.....2.9
RAM - 5V and RAM - 12V Tests.....2.9

The Apple /// Dealer Diagnostics diskette (P/N 077-0013A) is to be used with the Troubleshooting Flowchart (below, section 3). This section describes how to run the tests on the diskette. Normally (see section D) you will use the TEST ALL option to run all the tests in sequence. If you wish to run or repeat an individual test, simply use the up- and down-arrow keys to select that test from the main menu and press RETURN to accept it.

FIGURE 1

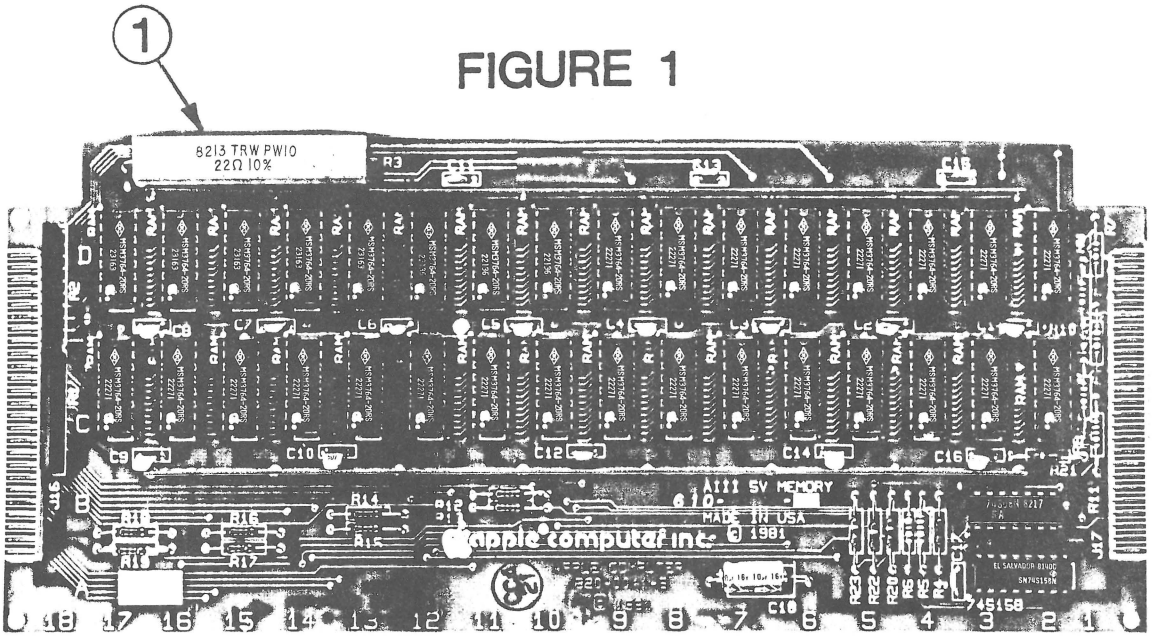

5V MEMORY BOARD

FIGURE 2

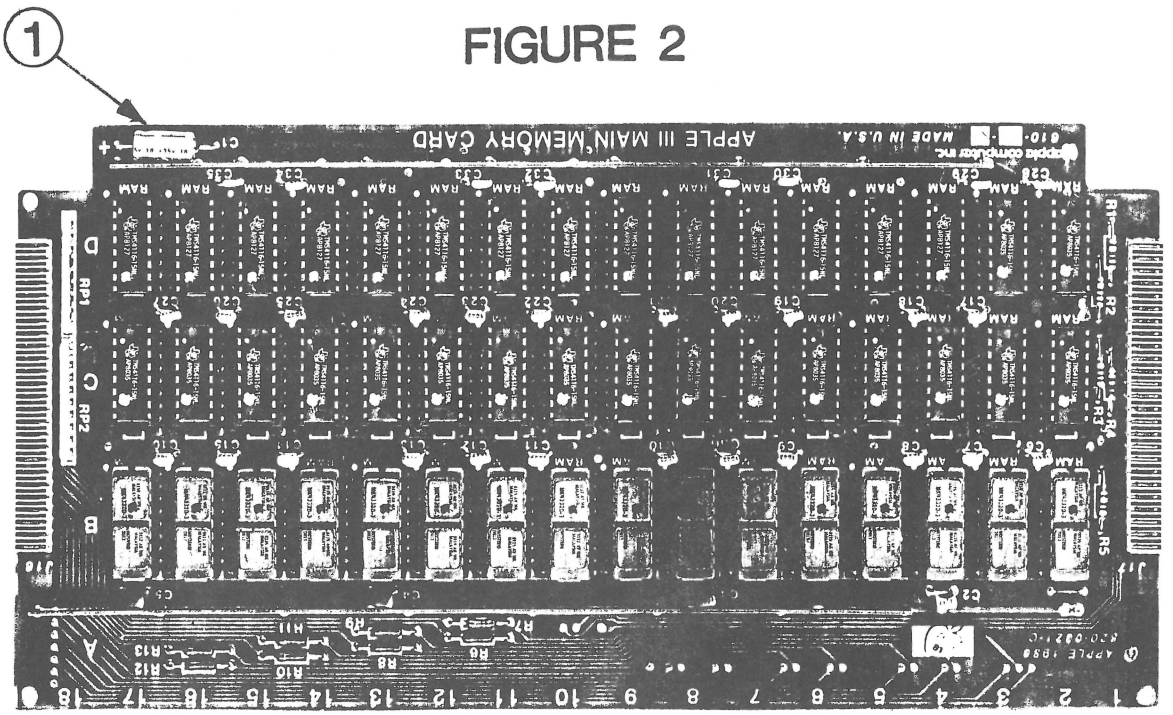

12V MEMORY BOARD

A. DIAGNOSTICS SETUP

NOTE: Before using the Diagnostic Diskette, make a backup by using the Device Handling Commands on the System Utilities diskette.

1. Determine whether the system under test has a 5-volt or a 12-volt memory board. (Early models of the Apple /// use a 12-volt memory board; later models use a 5-volt board. For the RAM tests (below, p.2.9), you need to know which style board is in the system under test.)

   a) Power down the Apple /// and remove the top cover.

   b) Look straight down through the main opening toward the front of the chassis. You will see the edge of the memory board projecting from under the keyboard, and on the left corner of the board you will see either a large grey ceramic resistor (5V board: Figure 1, #1), or a small blue tubular capacitor (12V board: Figure 2, #1).

   c) Write down which type board is in the Apple ///.

2. Replace the cover, and check to see that your Apple /// and associated peripherals are all properly connected.

3. Insert the diagnostics diskette into the internal disk drive and boot the system.

B. DIAGNOSTIC MENU

After you have successfully booted the diagnostic program, you will see the menu below displayed on the monitor screen.

```
                MAIN MENU
TEST ALL

VIDEO                       (NOT TESTED)
SOUND                       (NOT TESTED)
RAM TEST - 5V               (NOT TESTED)
DISK                        (NOT TESTED)
KEYBOARD                    (NOT TESTED)
ROM                         (NOT TESTED)

RAM TEST - 12V              (NOT TESTED)
MAKE TEST DISKS

PRESS:  UP/DOWN ARROWS TO SELECT TEST
        RETURN TO RUN TEST
PRESS:  ESC(APE) TO QUIT
```

NOTE: Because the Apple /// runs several internal diagnostics before booting, having come this far is a vote of confidence for correct system operation.

You will notice that TEST ALL is highlighted in inverse video. The inverse video indicates which test will be run when RETURN is pressed.

The UP/DOWN Arrows will move the inverse cursor line through the list of menu options one-by-one. Pressing RETURN will accept and run the highlighted menu option.

Pressing the ESCAPE key will exit the diagnostics program altogether.

C. MAKE TEST DISKS

In order to run the DISK TEST (below, p. 2.7), you must first make a test diskette for each disk drive in the system.

1. Press the Down Arrow several times until "MAKE TEST DISKS" is highlighted.

2. Accept this option by pressing the RETURN key.

3. Remove the diagnostic diskette from the internal drive.

4. When asked for the drive number for which you will create your test diskette, type a number which corresponds to the drive (1 = INTERNAL; 2, 3, and 4 = EXTERNAL) and press RETURN. If you have more than one drive, you must make a test diskette for each drive.

5. Insert a blank diskette into the internal drive. Close the door and press RETURN.

6. When the test diskette is complete, you will be asked if you want to make another test diskette. To create a test diskette for another drive type "Y", press RETURN, and follow the directions on the screen.

7. When finished, reinsert the Dealer Diagnostic Diskette into the internal drive and reboot the system.

Now you are ready to run the diagnostics on your Apple ///.

D. TEST ALL

Normally you should run all the tests when checking out a system. Accepting the TEST ALL option will cause all the tests on the menu (except the RAM - 12V test) to be run one-by-one as if they were selected one at a time.

1. Skip through the tests with the arrow keys until TEST ALL is highlighted.

2. Accept this option by pressing RETURN, and follow through the tests, referring to the notes below where necessary.

3. TEST ALL runs the RAM - 5V test automatically, but **not** the RAM - 12V test. If you are testing a system that has a 12V memory board, the RAM - 5V memory test will check the RAM. If no errors are encountered, the RAM on the 12V board is good. Should the RAM - 5V test fail, run the RAM - 12V test to get the proper location of the failed components. (See RAM - 5V and RAM - 12V TESTS, p. 2.9.)

4. If any errors are encountered, refer to the Apple /// Troubleshooting job aid to determine follow-up action.

E. VIDEO TESTS

The VIDEO diagnostic tests all the various screen and color modes available on the Apple ///. You will be presented with 13 different video displays and be asked to make a subjective evaluation of each one. After each display is presented, press:

SPACE BAR.....IF THE DISPLAY PASSES

RETURN KEY.....IF THE DISPLAY FAILS

ESCAPE KEY.....TO LEAVE THE VIDEO TESTS

LEFT ARROW KEY.....TO RETRY THE TEST

NOTE: With a B&W monitor, different colors will be displayed as different shades of grey. Some B&W monitors are not capable of displaying all the different shades with a single setting of the monitor controls; in particular, parts of the AHIRES screens will be hard to see. You can adjust the brightness control on the back of the monitor to make the picture visible; you should not expect it to be perfectly clear on a B&W monitor.

You will find the chart describing your video display on the next page. The list is in the same order as the test.

WHAT YOU SEE

TEST DISPLAY	B&W MONITOR	COLOR MONITOR
HIRES MODE 1	B&W Pattern only	No Color
HIRES MODE 2	B&W Pattern only	No Color
280 x 192 COLOR HIRES MODE	Negative image	Red and Black
280 x 192 COLOR HIRES MODE 2	B&W Pattern	Green & White/ or Yellow
SUPER HIRES TEST 1	B&W Pattern only	No Color
SUPER HIRES TEST 2	B&W Pattern only	No Color
AHIRES TEST 1	Pattern divided into 4 different shades of grey.	From top to bottom, the pattern is colored: blue, green, & gold or orange.
AHIRES TEST 2	Pattern divided into 4 different shades of grey.	From top to bottom, the pattern is colored: blue, green, & gold or orange.
COLOR BAR & GREY SCALE TEST.	16 shades of grey from white on left to black on right--- may be difficult to resolve.	16 color shades, from left to right: white, aqua, yellow, green, pink, grey, orange, brown, light blue, medium blue, grey, dark green, light purple, dark blue, magenta and black.
APPLE II TEXT MODE 1	Sentence and Alphabet are displayed.	Same as B&W
APPLE II TEXT MODE 2	large #2 is displayed.	same as B&W
APPLE /// 40 COLUMN TEXT MODE	16 blocks of different shades of grey, with color names printed in each box.	16 different colored blocks with the color names printed in each box.

TEST DISPLAY	B&W MONITOR	COLOR MONITOR
APPLE /// 80 COLUMN TEXT MODE	smaller characters across 80 columns	same as B&W

F. SOUND TESTS

The SOUND diagnostic has 3 parts: a soft bell, a hard bell, and a sound that gradually grows in amplitude. After each sound, press:

SPACEBAR.....IF YOU HEAR THE SOUND
or RETURN KEY.....IF YOU DO NOT HEAR THE SOUND

G. DISK TEST

The DISK TEST tests the seek and the read-write functions of the disk drives. IT IS VERY SENSITIVE AND MAY FAIL A DRIVE THAT IS ACCEPTABLE AND USABLE. If a drive passes this test, you can be sure it is good. If it fails, see note at end of this section.

NOTE: Before running the DISK TEST you must have made test diskettes (see section C above).

1. Remove the dealer diagnostic diskette from the internal drive.

2. Insert the test disk that you created earlier. Close the drive door and press RETURN.

3. You will now be asked for the number of external drives. Type the number of external drives in the test system (i.e., do not count the internal drive) and then press RETURN.

4. The test will now run automatically, ending with a test summary, telling you which drives have passed or failed.

5. Remove the test diskette from the internal drive.

6. Reinsert the diagnostic diskette and press RETURN.

NOTE: IF A DRIVE FAILS THE DISK TEST, 1) TRY THE TEST AGAIN WITH A DIFFERENT TEST DISKETTE (a worn test disk can cause failure); 2) TEST THE D-SPEED USING THE APPLE][CALIBRATION OR DISK ALIGNMENT AID DISKETTE IN EMULATION MODE, AND ADJUST IF NECESSARY [SOS 1.3 has a narrow tolerance (+ or - 10), so get as close to 0 as possible]; THEN TRY THE DISK TEST AGAIN. IF THE DRIVE STILL FAILS, SEE THE APPLE /// TROUBLESHOOTING CHART.

H. KEYBOARD TESTS

The keyboard test is divided into 4 parts:

1. Alphanumeric Keys
2. Special Function Keys
3. Numeric Keypad Keys
4. Keyboard Interrupt

NOTE: The steps below must be followed exactly or the test will fail.

1. Alphanumeric Keys:

   Every alphanumeric keystroke possible will be displayed on the screen. As you press the keys, their characters should disappear. Do not use the SHIFT key except where directed to, and press the SPACE bar last.

   a) Press the left SHIFT key and while holding it down press the 2 key.

   b) Press the right SHIFT key and while holding it down press the = key.

   c) Press the CONTROL key and while holding it down press the A key.

   d) Press all the remaining keys on the main keyboard except the SPACE bar. Each time a key is pressed, its character should disappear from the screen.

2. Numeric Keypad Keys:

   This test proceeds in the same manner as the Alphanumeric Key test, but for the keys on the numeric keypad.

   After you have removed all of the keys displayed on the monitor, you will automatically go to the Special Function Keys test. Notice that you can abort this test at any time by pressing ESCAPE.

3. Special Function Keys:

   a) After the special function keys appear press the ALPHA LOCK key twice. This will test the ALPHA LOCK key. **Be sure the ALPHA LOCK key is left in the up or unlock position.**

   b) The diagnostic will then ask you to press the SPACE BAR and to hold it down. This is to test the slow repeat function. Don't release the SPACE BAR: to complete the next step you must still be holding the SPACE BAR down.

c) Next, you will be asked to press the OPEN APPLE key and SOLID APPLE key down simultaneously. This tests both the OPEN APPLE key and the fast repeat function.

d) Now release all the keys; then press first the SOLID APPLE key and then the SPACE BAR. This is to test the repeat inhibit function.

4. Keyboard Interrupt Test:

When the keyboard interrupt test comes up on the screen simply press any key to continue. The diagnostic will inform you of the keyboard status and then return to the main menu.

J. ROM TEST

The system takes over and you will see one of two messages:

ROM PASSES . . . or ROM FAILS . . .

NOTE: If you selected the TEST ALL option from the main menu, you will be returned to the menu after the ROM test. The test results will be displayed to the right of each test option.

K. RAM - 5V and RAM - 12V TESTS

If you use the TEST ALL option, the system will automatically run the 5V test, and if it reports no errors, you can be confident that all RAM are good, no matter which style of board is installed in the Apple ///. If it reports failures, however, you must run the RAM - 12V test in order to obtain the correct locations of failed RAM.

The instructions for both tests are the same (except for reading the failure messages). Read through the steps below, and then run the test.

1. Get the memory size from the bottom of the Apple /// where the serial number is located.

2. Select either the RAM - 5V or the RAM - 12V test, depending on the style of memory board in your Apple (see Section A above, p. 2.3), and press RETURN to begin the test.

CONTINUED ON NEXT PAGE

3. The test will now attempt to determine the size of memory in the system. There are three possible outcomes:

a) A screen will appear with the correct memory size. Press the SPACE bar and the RAM test will start.

b) A screen will appear with the wrong memory size.

(1) Press the RETURN key, and

(2) A screen will appear and ask you for the correct memory size.

(3) Type the letter that corresponds to the correct memory size.

(4) The first screen will reappear with the newly selected memory size. If this is correct, press the SPACE bar and the test will start. If the memory size is not correct, press the RETURN key and the second screen will reappear so that you may reselect the correct memory size.

c) The test will not be able to determine the size of memory by itself, so a screen will appear and ask you for the correct memory size.

(1) Select the letter that corresponds to the correct memory size.

(2) A screen will appear with the selected memory size. If this is correct, press the SPACE bar and the test will start. If the memory size is not correct, press the RETURN key and the second screen will reappear so that you may reselect the correct memory size.

NOTE: Selection of the wrong size memory may lead to indication of RAM MAP FAILURE. Reboot the disk and try to run the test again.

4. The test will then check the RAM and report any failures. The 12V test gives RAM locations according to a grid of letters and numbers printed along the side and top of the 12V board (rows B, C, D; columns 2 through 17: see Figure 3).

The 5V test gives RAM numbers (U1 through U32). On early versions of the 5V board, these U-numbers were printed next to the RAM locations on the board; on later 5V boards, the U-numbers are no longer printed: to locate U-numbers on those boards, use Figure 4.

NOTE: If the correct memory is selected and the message RAM MAP FAILURE appears, it may indicate that the memory board or the main logic assembly needs to be replaced. (See Apple /// Troubleshooting Flowchart).

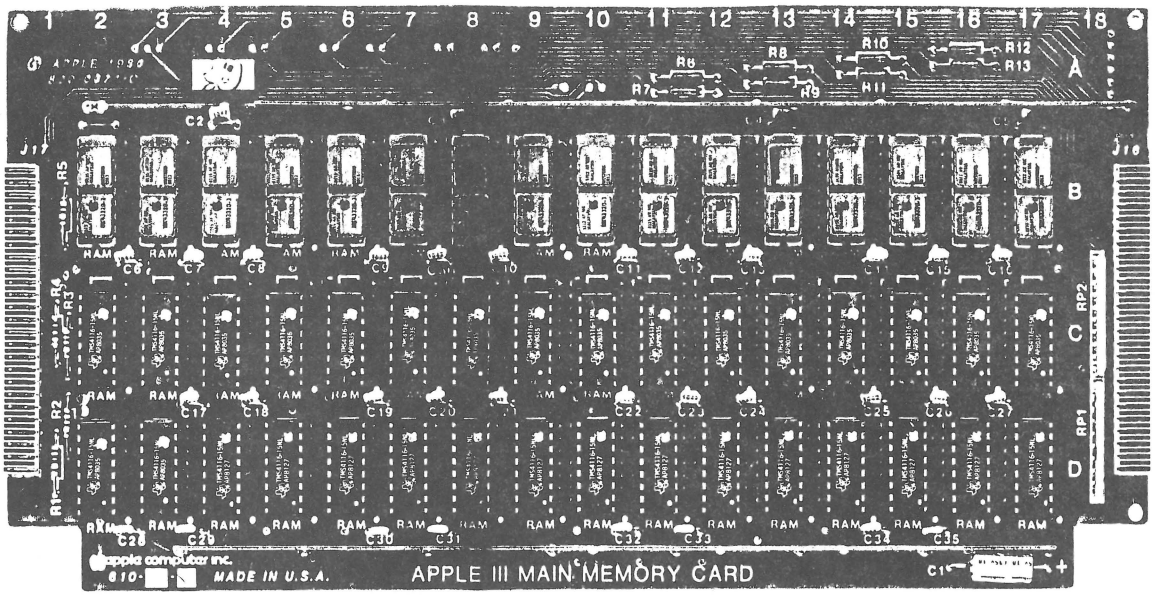

FIGURE 3 — 12V BOARD

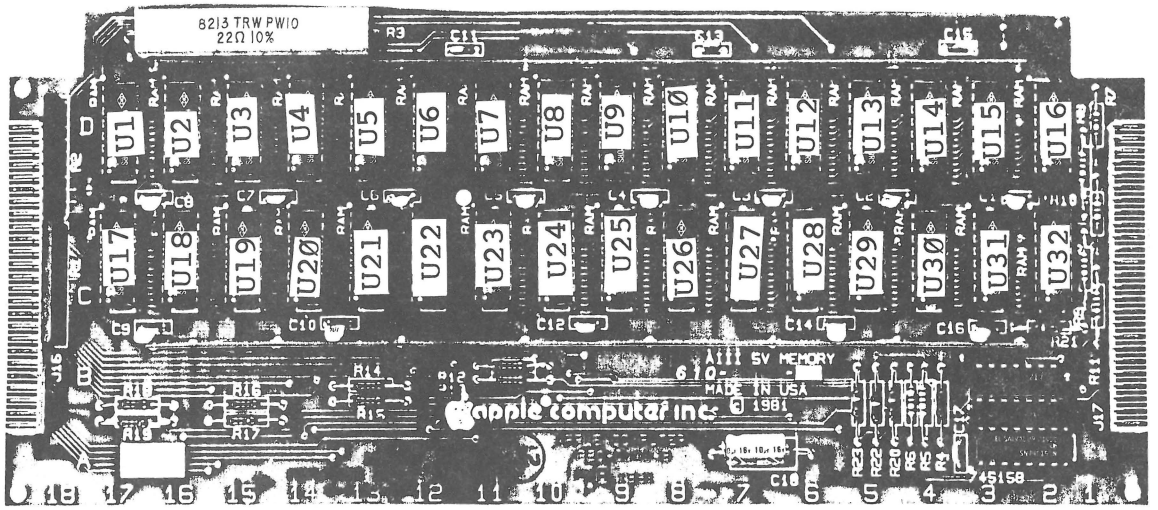

FIGURE 4 — 5V BOARD

Apple /// Technical Procedures

Section 3

Troubleshooting

Contents:

Using the Diagnostic Flowchart.....3.3
Steps Referred to in the Lettered Boxes of the Flowchart..3.4
ProFile Problems with the Apple ///.....3.8

A. USING THE DIAGNOSTIC FLOWCHART

1. The flowchart is made up of numbered and lettered boxes. The numbered boxes contain directions for proceeding through the flowchart based on the symptoms that show up on the Apple ///.

2. The lettered boxes contain a list of numbers. Each number refers to one of the 11 steps.

3. Always begin troubleshooting at Box 1 of the flowchart, power on with the SOS System Demonstration diskette. When the Apple ///'s symptoms lead you through the flowchart to a lettered box containing a list of troubleshootingsteps, follow the instructions below:

   a. Turn the power off.

   b. Carry out the designated troubleshooting step. (Start at the top of the list of numbered steps.)

4. When a troubleshooting step leads you to open the Apple ///, you should:

   a. Check to make sure all connecting cables are properly hooked up.

   b. Check all boards to make sure all IC chips are properly seated.

   c. Power on to see if the problem is eliminated.

      (1) If the problem IS NOT eliminated:

          (a) Turn the power off.

          (b) Replace whatever spare module you just put into the Apple /// with original.

          (c) Carry out the next troubleshooting step listed in the lettered box.

          (d) Go back to Step 4c above.

      (2) If the problem IS eliminated:

          (a) Leave the swapped module in place and continue through the Diagnostic Flowchart.

          (b) Take the "bad" module and prepare it for shipment to your Level II Service Center.

5. The Diagnostic Flowchart is designed to test only the basic Apple /// system. Disconnect any peripheral devices and cards and troubleshoot them separately according to the procedures explained in the appropriate Level 1 Service Training module.

6. Each swap step involves exchanging a known good part from your spares kit with the questionable part from the Apple ///.

   a. When swapping, first just connect the cable(s) to the new module so you can see if the swap fixes things or not.

   b. Don't fully install the new module and screw everything down--if the new module doesn't solve the problem you'll just have to take it out again.

B. STEPS REFERRED TO IN THE LETTERED BOXES OF THE FLOWCHART

1. Swap the appropriate connecting cable.*
   V = Video cable (if available)
   PS = Power Supply cable
   DD = Disk Drive cable
   KB = Keyboard cable

   NOTE: The keyboard and disk drive cables are identical to each other. Your Spares Kit may only list the DD cable, but you can use it whenever you need to swap the KB cable.

2. Swap the power supply.

   a. Check the power supply fuse first; swap it if it's burned out.

3. Swap the drive.

   a. If the drive proves to be the problem, take the problem drive and further isolate the defective module down to the analog card or mechanical assembly:

      (1) Swap the analog card.

         (a) Take the analog card of the "bad drive", put it in the good drive, and power on again. If the drive does not work you know the problem with the "bad drive" is with the analog card. If the drive does work you know the "bad drive" is with the mechanical assembly.

(b) If the mechanical assembly proves to be the problem it may just be an adjustment problem. You can run the disk tests for the Apple II in emulation mode on the /// and make any necessary adjustments to see if they eliminate the problem.

4. Swap the main logic board.

5. Swap the keyboard.

6. Swap the RAM memory board. (You may have to reload the new board with the RAM from the original board.)

7. Try booting again.

8. Try booting a different SOS diskette.

9. Swap the video monitor.

10. Swap the speaker.

11. Swap the designated RAM IC chips. (Refer to the Apple /// Diagnostics - Section 2, RAM - 5v TEST and RAM - 12v TEST.)

12. Look through the back slots of the of the Apple /// to see if the red light (LED) is on. If it is not on:

    a. Check the power supply fuse first; swap it if it's burned out. (See Apple /// Takeapart - Section 1 "REMOVING THE POWER SUPPLY". Once you have removed the power supply, the fuse will be easy to find.)

    b. Swap the power supply.

13. Press CONTROL/RESET (Warmboot); if Warmboot is successful, replace the Power Light.

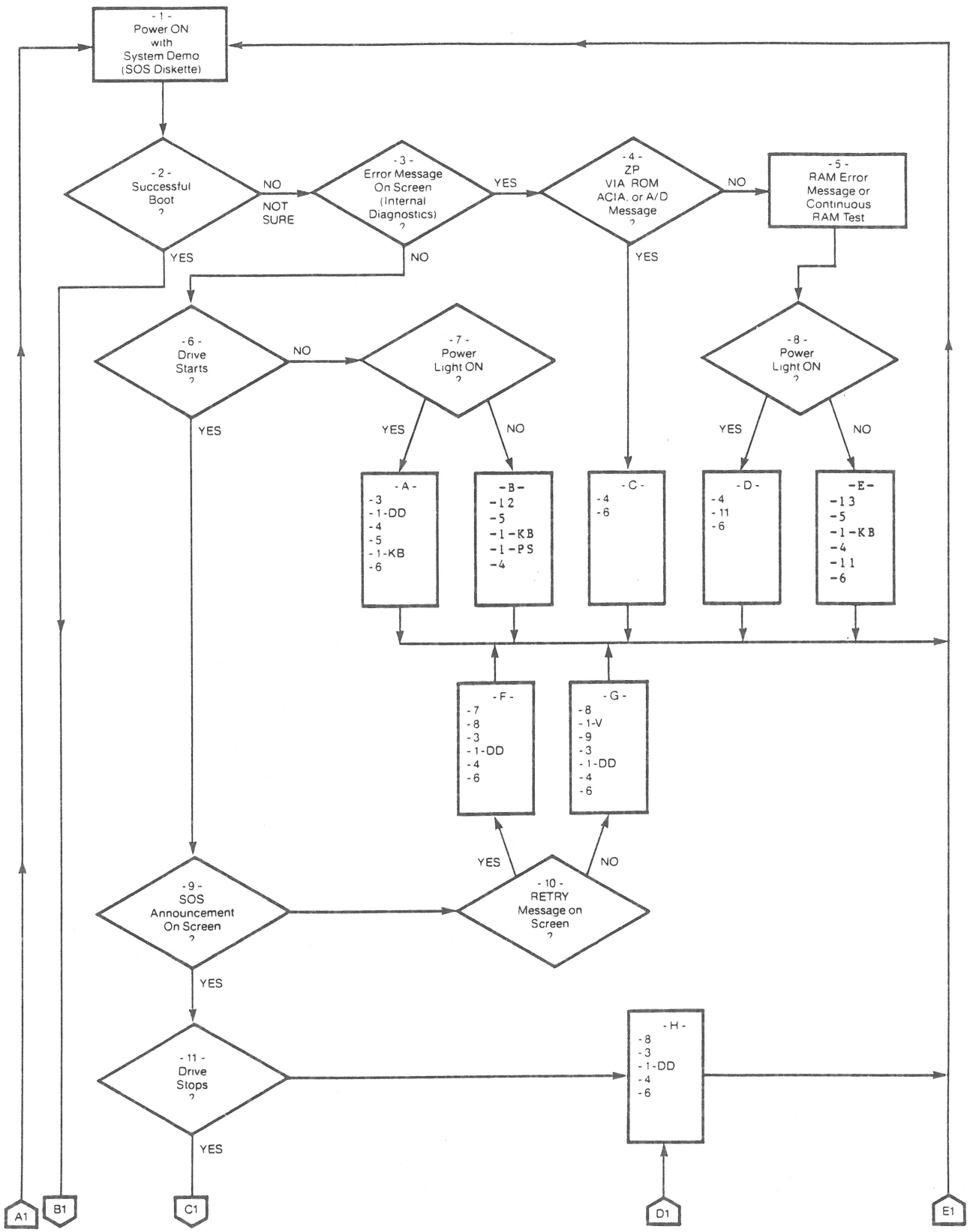
- 1 -
Power ON
with
System Demo
(SOS Diskette)
- 2 -
Successful
Boot
?
NO
NOT
SURE
YES
- 3 -
Error Message
On Screen
(Internal
Diagnostics)
?
YES
NO
- 4 -
ZP
VIA ROM
ACIA, or A/D
Message
?
NO
YES
- 5 -
RAM Error
Message or
Continuous
RAM Test
- 6 -
Drive
Starts
?
NO
YES
- 7 -
Power
Light ON
?
YES
NO
- 8 -
Power
Light ON
?
YES
NO
- A -
-3
-1-DD
-4
-5
-1-KB
-6
-B-
-12
-5
-1-KB
-1-PS
-4
- C -
-4
-6
- D -
-4
-11
-6
-E-
-13
-5
-1-KB
-4
-11
-6
- F -
-7
-8
-3
-1-DD
-4
-6
- G -
-8
-1-V
-9
-3
-1-DD
-4
-6
YES
NO
- 9 -
SOS
Announcement
On Screen
?
- 10 -
RETRY
Message on
Screen
?
YES
- 11 -
Drive
Stops
?
YES
- H -
-8
-3
-1-DD
-4
-6
A1
B1
C1
D1
E1

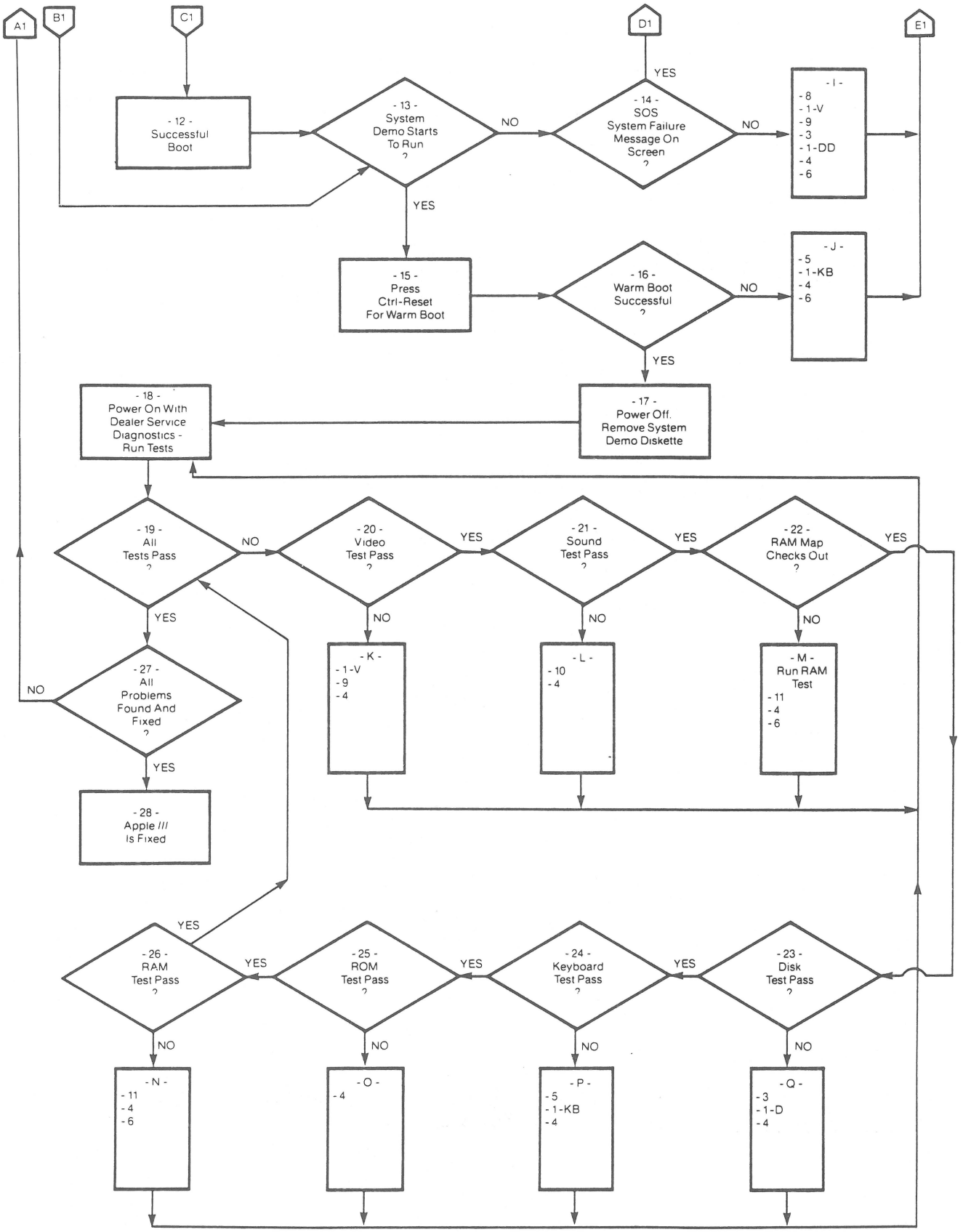
A1
B1
C1
D1
E1
- 12 - Successful Boot
- 13 - System Demo Starts To Run ?
NO
YES
- 14 - SOS System Failure Message On Screen ?
NO
YES
- I - - 8 - 1-V - 9 - 3 - 1-DD - 4 - 6
- 15 - Press Ctrl-Reset For Warm Boot
- 16 - Warm Boot Successful ?
NO
YES
- J - - 5 - 1-KB - 4 - 6
- 17 - Power Off. Remove System Demo Diskette
- 18 - Power On With Dealer Service Diagnostics - Run Tests
- 19 - All Tests Pass ?
NO
YES
- 20 - Video Test Pass ?
NO
YES
- K - - 1-V - 9 - 4
- 21 - Sound Test Pass ?
NO
YES
- L - - 10 - 4
- 22 - RAM Map Checks Out ?
NO
YES
- M - Run RAM Test - 11 - 4 - 6
- 27 - All Problems Found And Fixed ?
NO
YES
- 28 - Apple /// Is Fixed
- 23 - Disk Test Pass ?
NO
YES
- Q - - 3 - 1-D - 4
- 24 - Keyboard Test Pass ?
NO
YES
- P - - 5 - 1-KB - 4
- 25 - ROM Test Pass ?
NO
YES
- O - - 4
- 26 - RAM Test Pass ?
NO
YES
- N - - 11 - 4 - 6

ProFile Problems with the Apple ///

Potential problems may arise when the RFI-shielded cables are used with earlier versions of the Apple /// ProFile Interface Card. The problems range from random data handling errors to unreadable files saved on the ProFile.

The problem is caused by the resistor array values on the Apple /// ProFile Interface Card (at location DM 1 and DM 2). The resistor arrays were changed from 330 Ohms to 100 Ohms. Interface cards with the 330 Ohm resister arrays (manfactured prior to October 1983) are not compatible with the new ProFile Shielded Cable. An impedance mismatch occurs when the older interface cards are connected to the shielded cable, resulting in various problems.

The following solutions will correct the problem:

1. Use the flat ribbon cables; they will operate on either the 330 Ohm or the 100 Ohm revisions of the ProFile Interface Card.

2. If the RFI-shielded cable is to be used, verify that the Apple /// ProFile Interface Card has 100 Ohm resister arrays at locations DM 1 and DM 2.

Apple Technical Procedures

Apple III/III Plus

Section 4 – Modifications

❑ CONTENTS

4.2 Installing the Apple III Clock Kit
4.4 Setting the Apple III Clock
4.6 Adjusting the Apple III Clock Speed
4.10 256K RAM Upgrade
4.12 Apple III Keyboard Replacement

❑ INSTALLING THE APPLE III CLOCK KIT

Materials Required

#1 and #2 Phillips screwdriver
Apple III System Utilities diskette
Apple III Clock Kit
Apple III Clock Calibration diskette

Procedure

1. Remove the Apple III cover and main logic board. Refer to Section 1, Take-Apart, if necessary.

2. Place the main logic board on a flat surface in front of you so that the empty socket at B3 is located to your left. Insert the clock chip into the empty socket with the notch on top of the chip facing toward the front, as shown in Figure 1.

3. Lift the main logic board gently and place the clamp through the two holes on the middle right-hand side of the main logic board as shown in Figure 1. Hold the clamp in place with your finger.

4. Place the battery adapter PCB over the large hole with the long, flat side of the battery adapter PCB toward the right edge of the main logic board as shown in Figure 1. The battery adapter PCB should be seated between the legs of the clamp.

5. Insert the screw through the middle of the battery adapter, and tighten the screw until the battery adapter PCB is snug against the main logic board.

6. Install 3 "AA" alkaline batteries into the battery pack as labeled in Figure 1, and on the battery pack. Now attach the lugs of the red and black wires of the battery cable to the battery case. Observe the proper polarity as shown in Figure 1.

7. Turn the Apple III right-side up. Clip the battery case onto the lip of the casting to the left of the speaker. Run the molex connector end of the battery cable down through the hole below the speaker on the Apple III as shown in Figure 1.

8. Reinstall the main logic board. Be sure to connect the female end of the lug connector to the male end on the battery adapter PCB, now attached to the main logic board.

9. Make all of the necessary connections to the main logic board and reinstall back to the Apple III case. Replace the Apple III cover.

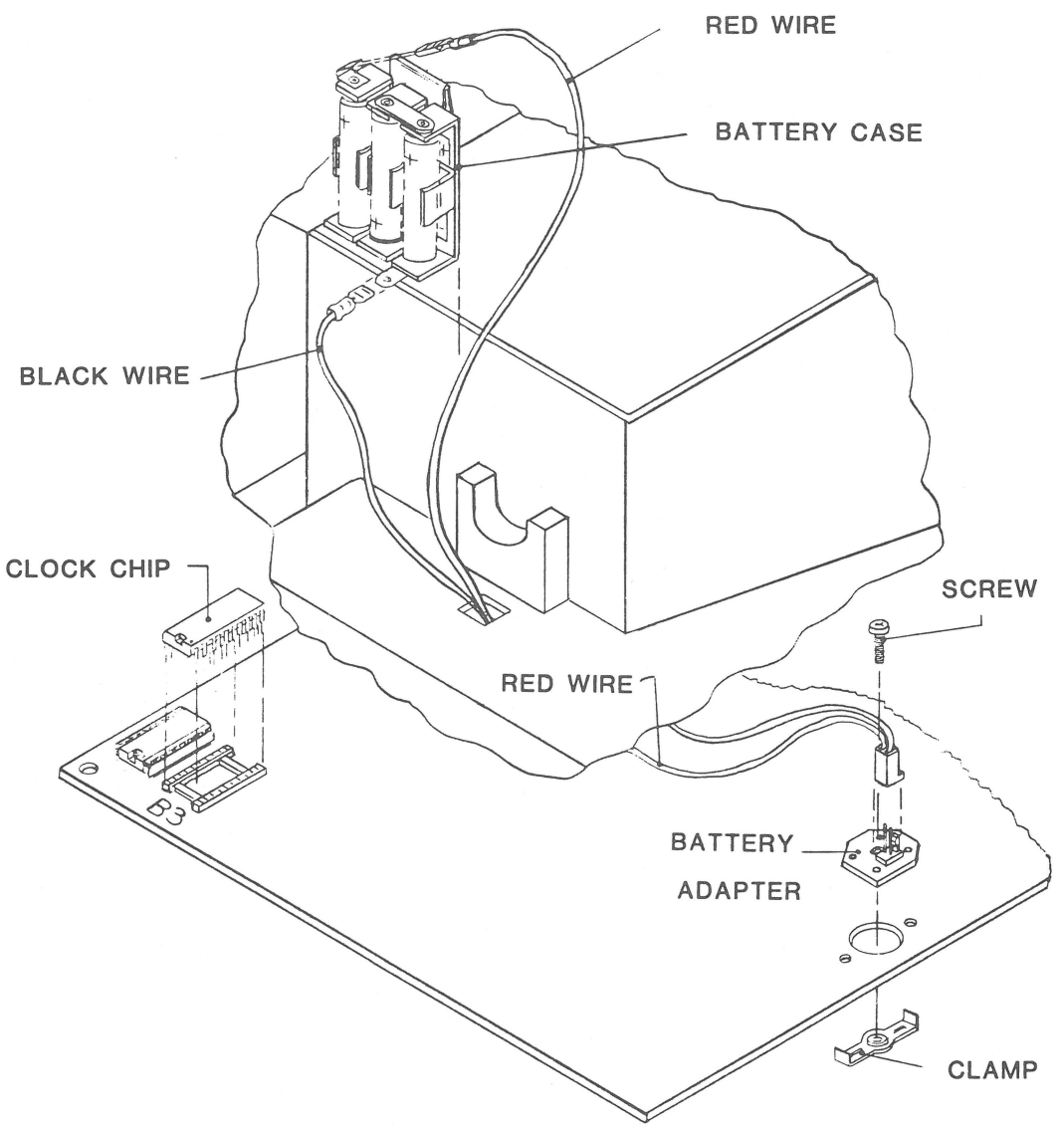

FIGURE 1

❑ SETTING THE APPLE III CLOCK

Introduction

In order to calibrate the Apple III clock, the clock time must be set close to the exact second so the number of seconds lost or gained can be determined.

> ***Note:*** To prevent confusion, any text that is to be entered into the computer is enclosd by curly brackets {}. Type everything, including punctuation, between them; but don't type the curly brackets themselves.

EXAMPLE: If you are supposed to type 1-2-3-4, it will appear in the text as {1234}.

Procedure

1. Boot the Utilities diskette and select {D}, Device handling commands.

2. Select {T} from the Devices Menu; set time and date.

3. The cursor should now be in the lower portion of the screen that says, "Set the date to: [ ]."

4. Type in the date in the format: {day <SPACE> month <SPACE> year}, where the month can either be the numerical representation or a three-letter abbreviation, and then press <RETURN>.

   If the date is January 1, 1982, it can be typed as: {1 Jan 82} or {1 1 82}.

5. Find out what the correct time is. You can do that by telephone.

6. The cursor should be in the box that says, "Set the time to: [ ]."

7. Listen to the time on the telephone: you should hear the hour, the minute, the upcoming ten-second mark, and then a beep.

8. Type in the time, including the seconds, which will represent the upcoming beep in the format: {hour:minute:second <SPACE> Xm}.

   If the upcoming beep will be 4:10:00 pm, you may enter the time as {4:10:00 pm}, {16:10:00}, or {04:10:00 pm}.

9. When you hear the tone, press <RETURN>.

10. Verify that the beeps occur at the same time that the seconds change on the Utilities time display in the upper-right corner of the monitor.

11. Repeat steps 6 thru 9 until the beeps are approximately concurrent with the seconds displayed on the monitor.

❑ ADJUSTING THE APPLE III CLOCK SPEED

Introduction

The Apple III clock is calibrated by comparing the Apple III System clock to the one-second intervals of the clock chip. In order to calibrate the clock within reasonable accuracy, without the use of very expensive calibration equipment, a 24 to 48 hour observation is required.

Note: The keyboard on the Apple III Plus does not have to be removed to adjust the clock speed. The trimmer capacitor can be adjusted by inserting a screwdriver through a small hole in the bottom of the base plate, underneath the keyboard (Figure 2, #1).

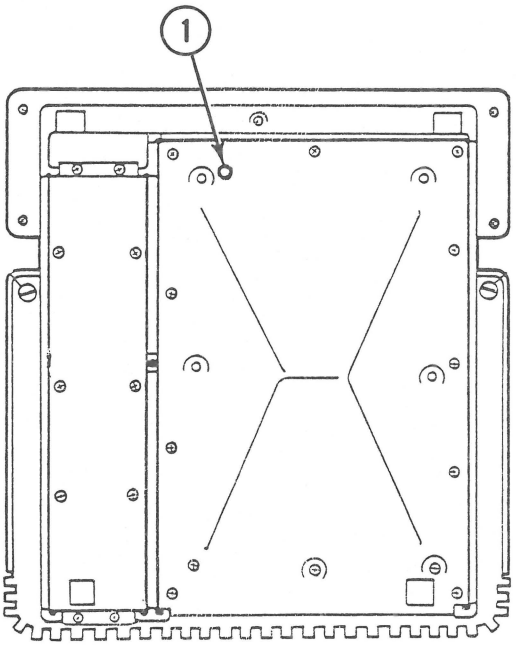

FIGURE 2

Procedure

1. Disconnect all connectors from the back of the Apple III.

2. Turn the Apple III over and remove the 5 screws that fasten the beige keyboard cover to the case.

3. Remove the keyboard cover. Then turn the Apple III rightside up and remove the 4 screws that hold the keyboard in place.

4. Connect the power cord and the video cable and boot the Apple III Clock Calibration Program.

5. Select the 10-second interval by pressing down the <ALPHA LOCK> key.

6. Lift the keyboard up and lay it carefully against the sloped Apple III front cover.

7. Wait until the speaker clicks twice (20 seconds) and note the value of the indicated number. The number should read +560, ± 9.

8. If the indicated number is not within the range indicated in step #7, adjust the trimmer capacitor located in the center of the keyboard with a small screwdriver. When you adjust the trimmer pot, the number will not change right away; it takes 10 seconds to update. Turn the trimmer capacitor clockwise to increase the value and counterclockwise to decrease the value.

   Note: On the Apple III Plus, the trimmer capacitor can be turned through the hole in the keyboard (Figure 2, #1). You do not have to take the keyboard apart.

9. Wait until the speaker clicks at least twice to ensure that the indicated number remains constant.

10. Repeat steps 7 thru 9 until the indicated number is between 551 and 569 (+560, ± 9). Once the number has been set it may vary slightly.

11. Record the indicated number of the Apple III Calibration Program on a piece of paper and attach it to the front of the Apple III.

12. After approximatelly 24 hours, boot the Utilities diskette and press {D}.

13. Find out the correct time. You can do that by calling the local time on the telephone.

14. Note the difference between the ten-second beeps on the telephone and the seconds on the Apple III clock in the upper right corner of the monitor.

15. Record the time difference to the closest 1/2 second on paper.

16. If the observation period has been longer or shorter than 24 hours, calculate the number of 24-hour periods by dividing the observation period by 24. Let's walk through an example:

    Suppose an Apple III clock has been running for 28 hours and has gained 5 seconds. The current value of the Apple III Clock Calibration Program is +780.

    Observation period in hours ÷ 24 = Number of 24-hour periods.

    28 ÷ 24 = 1.16 (24-hour periods).

17. Calculate the time difference in seconds per 24-hour period by dividing the time difference recorded in step #14 by the Number of 24-hour periods.

    Time Difference ÷ Number of 24-hour periods = Time Difference in seconds per 24-hour period.

    5 ÷ 1.16 = 4.31 seconds difference per 24-hour period.

18. Calculate the Clock Offset by multiplying the Number of seconds per 24-hour period by 118.

    Time Difference in seconds per 24-hour period X 118 = Clock Offset

    4.31 X 118 = 508.58

19. Calculate the new Apple III Clock Calibration value by adding or subtracting the clock offset. If the clock is gaining time, the offset value is subtracted from the Apple III Clock Calibration Value. If the clock is losing time, the offset value is added to the Apple III Clock Calibration Value.

Since the clock is gaining time, we subtract from the old value:

780 (old value) – 508.85 (offset) = 271.15 (new value)

20. Adjust the Apple III Clock Calibration Program Value to the new value found in step 19, following the procedure in steps 7 through 9.

Example

An Apple III clock has been running for 34 hours and has lost 2 seconds. The value of the Apple III Clock Calibration Program is +480. What value should the Apple III Clock Calibration Program indicate after adjustment?

1. Number of 24-hour increments: 34/24 = 1.42

2. Number of seconds per 24-hour period: 2 ÷ 1.42 = 1.41

3. Clock offset: 1.41 X 118 = 292.64

4. New Calibration Program value: 480 + 293 = 773

❑ 256K RAM UPGRADE

Introduction

To upgrade an Apple III from a 128K 12-volt RAM system to a 256K 5-volt RAM system, you will need to remove a resistor, solder a jumper wire, exchange two PROMs, and replace the 128K 12-volt memory board.

Identification

For the 128K 12-volt memory board, the Apple III logic board has PROM 341-0041 at coordinate C13, PROM 341-0044 at coordinate C11, and resistor R58 at coordinate D14.

For the 256K 5-volt memory board, the Apple III logic board has PROM 342-0063 at coordinate C13 and PROM 342-0061 at coordinate C11. Resistor R58 is removed and a jumper is installed at coordinate D14.

Materials Required

Soldering tools
Wire cutters
PROM 342-0063 and 342-0061
256K 5-volt memory board

Procedure

1. Remove the 128K logic board and memory board from the Apple III case. Then remove the 128K memory board from the logic board.

2. Locate the resistor R58 at coordinate D14 on the logic board.

3. Remove the resistor by cutting both leads with a pair of wire cutters. Once the resistor is removed, two small solder pads are visible.

4. Solder a small piece of wire to connect the pads.

5. Verify the connection with a voltmeter, if one is available.

6. Remove the two PROMs; one is at coordinate C13 (P/N 341-0041); the other is at coordinate C11 (P/N 341-0044).

7. Install the two new PROMs, one at coordinate C13 (P/N 342-0063), the other at coordinate C11 (P/N 342-0061).

8. Install the 256K memory board on the logic board.

9. Replace the logic board and the memory board in the Apple III system and run the diagnostic.

❑ APPLE III KEYBOARD REPLACEMENT

Introduction

The Apple III keyboard (P/N 661-91022) is no longer available as a replacement module. If you order an Apple III keyboard (P/N 661-91022), you will receive an Apple III Plus keyboard, keyboard cover, and keyboard encoder ROM. To replace a defective Apple III keyboard, exchange the Apple III keyboard, keyboard cover, and ROM with the new Apple III Plus keyboard, keyboard cover, and ROM. The old ROM is P/N 341-0034; the new replacement ROM is P/N 341-0136 or P/N 342-0136.

Materials Required

Grounded workbench and wriststrap
Medium flat-blade screwdriver
Small Phillips screwdriver
Medium Phillips screwdriver
IC extractor
Apple III Plus keyboard encoder ROM
Apple III Plus keyboard
Apple III Plus keyboard cover

Procedure

To replace the Apple III keyboard:

1. Power off the Apple III and disconnect the AC power cord.

2. Remove the monitor and disconnect all other external cables from the back of the Apple III.

3. Remove the cover. Refer to Section 1, Take-Apart, if necessary.

4. Remove any peripheral cards installed in slots 1 through 4. Grasp each card by the upper edges and pull straight up to remove.

5. Replace the cover to protect the disk drive bezel. Refer to Section 1, Take-Apart, if necessary.

6. Remove the main logic assembly. Refer to Section 1, Take-Apart, if necessary. **You do not need to remove the memory board, or unscrew the logic assembly from the insulating shield.**

7. Place the logic board on a grounded workbench pad and put on your grounding wriststrap.

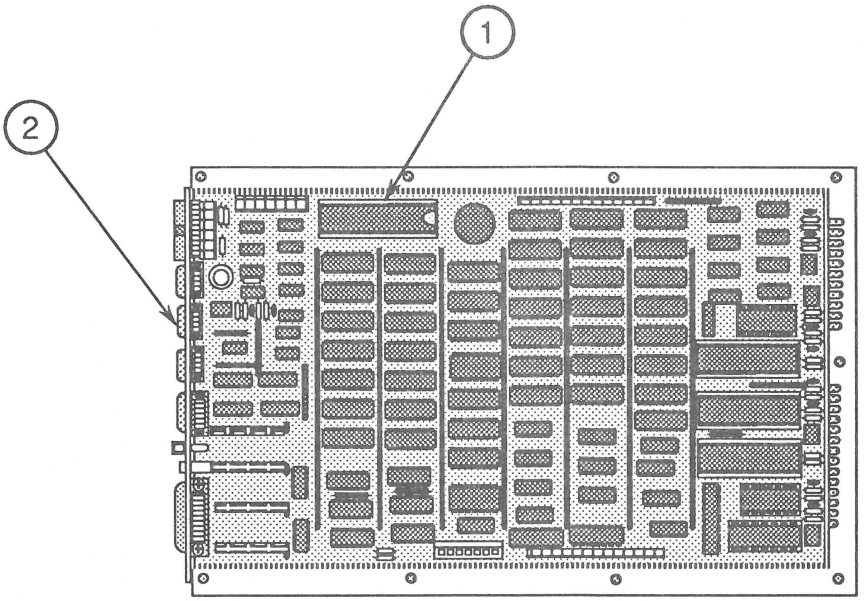

FIGURE 3

8. Locate the keyboard encoder ROM at coordinate J13 (Figure 3, #1) on the main logic board and verify that it is the old ROM (P/N 341-0035).

9. Using an IC extractor, remove the old ROM at location J13 (Figure 3, #1) on the logic board.

10. Install the new keyboard encoder ROM (P/N 341-0136 or 342-0136) at J13 (Figure 3, #1) on the main logic board. The small notch on the ROM should face **away** from the output connectors (Figure 3, #2).

11. Replace the main logic assembly. Refer to Section 1, Take-Apart, if necessary.

12. Remove the keyboard cover and keyboard. Refer to Section 1, Take-Apart, if necessary.

13. Install the Apple III Plus keyboard and keyboard cover. Refer to Section 1, Take-Apart, if necessary.

Apple /// Technical Procedures

Section 5

Apple /// Plus Diagnostics

Contents:

Introduction.....5.3
Diagnostics Setup.....5.3
Diagnostics Menu.....5.3
Make Test Disks (Diskettes).....5.4
RAM Test.....5.5
ROM Test.....5.6
Calendar/Clock Test.....5.6
Disk Test.....5.6
Keyboard Tests.....5.7
Sound Tests.....5.9
Video Tests.....5.10
Test All.....5.13

A. INTRODUCTION

NOTE: Before using the Diagnostic Diskette, make a backup by using the Device Handling Commands on the System Utilities diskette.

This section describes the function of each of the diagnostic tests and how to run them. You will need a known-good disk drive and a copy of the diskette "Apple /// Plus Dealer Diagnostic Program" (P/N 077-0032). You will also need a blank diskette, to be made into a test diskette, for each disk drive you intend to test.

As you run the diagnostics, some of the messages on the screen will refer to the Apple /// instead of the Apple /// Plus. This message has no significance as long as you are using the correct diagnostic diskette.

This comprehensive diagnostic tests the ROM, RAM, Calendar/clock chip, keyboard, sound and video of the Apple /// Plus. You can run the diagnostic tests at random (except the KEYBOARD TEST which will not run unless one of the other tests is run before it), or in sequence using Test All. When you run the tests one at a time, you are returned to the Main Menu when the test ends or fails. Selecting "Test All" causes one test to run after the other, as long as each test passes. If any test fails or if you have completed all of the tests, you are returned to the Main Menu.

NOTE: Some of the diagnostics will NOT pass unless they are run EXACTLY as specified. Before you run the following diagnostic tests make sure you read ALL instructions FIRST:

Make Test Diskettes

Keyboard tests

Video tests--especially the Interlace test

NOTE: Running the Keyboard test first can cause the system to hang. So before running the Keyboard test, run any other test first (ROM, RAM, etc.).

B. DIAGNOSTICS SETUP

1. Check to see that your Apple /// Plus and all associated peripherals are hooked up properly.

2. Insert the diagnostics diskette into the internal disk drive and boot the system.

3. If the text appears to vibrate, switch the Interlace switch to the off (0) position. (The switch is located on the left side of the computer about halfway back.)

C. DIAGNOSTIC MENU

1. After you have booted the diagnostic program, the following menu is displayed on the monitor.

```
APPLE /// PLUS DEALER TEST

          MAIN MENU

TEST ALL

RAM                        (NOT TESTED)
ROM                        (NOT TESTED)
CALENDAR/CLOCK             (NOT TESTED)
DISK                       (NOT TESTED)
KEYBOARD                   (NOT TESTED)
SOUND                      (NOT TESTED)
VIDEO                      (NOT TESTED)

MAKE TEST DISKS

PRESS:   UP/DOWN ARROWS TO SELECT TEST
         RETURN TO RUN TEST
```

NOTE: Because the Apple /// Plus runs several internal diagnostics before booting, coming this far is a vote of confidence for correct system operation.

2. You will notice that TEST ALL is highlighted in inverse video. The inverse video indicates which test will run when RETURN is pressed.

3. UP/DOWN arrows move the inverse cursor line through the list of menu options one-by-one. Pressing RETURN accepts and runs the highlighted option.

D. MAKE TEST DISKS (DISKETTES)

This procedure creates a diskette used for the disk test. You will need one diskette for <u>each</u> drive you are going to test. These test diskettes can be made on any Apple /// Plus system with a known-good disk drive, then used whenever you need to test a disk drive. The known-good disk drive must be configured as Drive 2.

1. Press the down arrow several times until MAKE TEST DISKS is highlighted.

2. Accept this option by pressing the RETURN key.

3. The screen displays:

TEST DISKETTE MAKER

PLACE DISK TO BE FORMATTED IN DRIVE 2

WARNING

DISKETTE DATA IN DRIVE 2 WILL BE ERASED

PRESS ANY KEY TO BEGIN

4. Insert a blank disk into the known-good drive 2. Close the door and press RETURN. The same message remains on the screen during the process.

5. When the test diskette is complete, you will be asked if you want to make another test disk. Pressing "Y" will return you to step 5.

6. If you do not want to make any more test diskettes, press any key other than Y and you will return to the MAIN MENU.

E. RAM TEST

1. To run the RAM test if you have not selected TEST ALL, press the up or down arrow through the Main Menu until RAM TEST is highlighted; then press RETURN.

2. The test first attempts to determine the size of system memory. There are two possible outcomes:

   a. A screen appears with the correct memory size. Press SPACE BAR and the RAM test starts.

   b. A screen appears with the wrong memory size. Press RETURN. The test prints "RAM MAP FAILED" and returns to the Main Menu. If this happens run the RAM test again.

3. If the memory size was correctly determined, the test then checks the RAM and reports any failures by their memory board location (e.g., D10, D20.)

4. Upon completion of the test, the Main Menu appears (unless you have selected Test All).

F. ROM TEST

1. Use the up/down arrows until ROM Test is highlighted; then press RETURN.

2. The system takes over and you will see one of two messages:

   ROM PASSES . . . or **ROM FAILS . . .**

3. Upon completion of the test, the Main menu reappears, unless you have selected Test All.

G. CALENDAR/CLOCK TEST

This test checks all functions of the calendar/clock chip. Failures, if encountered, are reported on the monitor. If any part of the test fails, the chip should be replaced.

H. DISK TEST

This option runs a series of tests on each Apple /// Plus drive you wish to test. The drives are tested one at a time. If one fails, the test then restarts for the next drive to be tested. A test diskette is required for each drive you intend to test. (See next page.)

1. Remove the Dealer Diagnostic disk from the internal drive. Then press RETURN to continue.

2. Install the test diskettes, which were made by the "Make Test Disks (Diskettes) procedure, in all drives to be tested.

   NOTE: Only test diskettes made with this diagnostic will work for the disk tests.

3. To start the test, press the key (1-4) corresponding to the number of drives you have to test. If you decide not to run the test, press '0'.

4. If a drive fails this or any other test in the series, the system stops testing that drive and starts the series of tests on the next drive.

5. As the tests continue, the screen clears, the system beeps and the following message appears:

APPLE /// MODE DISKSWITCH TEST

REMOVE DISKETTE FROM DRIVE 1
AND PUT IT BACK IN AGAIN

PRESS RETURN TO CONTINUE

Open the drive door, pull the test disk out from the drive about 1 inch and put it back in. Close the disk door and press RETURN. The test status is briefly displayed and the screen clears. (This switch is used by SOS during some of its operations.)

6. The Disk Track Seek test now starts. Thirty four tracks are displayed on the screen and are alternately tested, from the outermost track to the innermost track, until the middle track is reached. The status of each track is displayed.

7. Disk speed test first reformats track 52 on the test diskette, then checks the DSPEED. A scale between -100 (slow) and +100 (fast) is shown with an arrow pointing to the measured value. The computer beeps if Dspeed is out of spec (+/- 10). If there is no beep, the value is acceptable. The value is displayed until you press the ESCAPE key to continue. The screen then clears and the message:

- RESTORING TEST DISKETTE -

is displayed. Do NOT turn the power off or open the drive door while the restoring procedure is in progress: if you do, it will destroy the test diskette. If there are other drives to be tested, steps 5 thru 6 repeat. When all drives have been tested the Main Menu reappears (unless the Test All option was selected, in which case the next test starts.)

I. KEYBOARD TESTS

The keyboard test is divided into 4 sections:

1. Alphanumeric Keys
2. Special Function Keys
5. Numeric Keypad Keys
4. Keyboard Interrupt

There is a delay after each section and any special instructions are shown on the monitor at the beginning of each section.

NOTE: Some parts of this test will always fail UNLESS you follow the directions exactly. Read ALL directions carefully before running the Keyboard Tests. **NOTE**s in each section alert you to special procedures.

1. Alphanumeric Keys

    a. Every alphanumeric keystroke possible is displayed.

    b. Press each key and verify that the corresponding letter or number on the screen is removed.

        NOTE: Press the SPACE BAR LAST. Otherwise, the next test will not automatically start. Pressing the space bar twice might cause the test to fail.

    c. You will need to use a combination of keys to remove three of the keys:

        Control "A" for CONTROL
        Shift "2" for left shift and
        Shift "=" for right shift.

2. Numeric Keyboard Test

    a. The keys on the numeric keyboard are displayed.

    b. Press each key and verify that the corresponding number on the screen is removed.

        NOTE: You can abort this test any time by pressing ESCAPE. The test will record a failure if it is aborted.

    c. After you have removed all of the keys displayed on the monitor, the next test automatically starts.

3. Special Function Keys

NOTE: If you hold the keys down too long, this test might fail.

a. After the special function keys are displayed, press the CAPS LOCK (ALPHA LOCK) key once. This tests the CAPS LOCK key.

NOTE: If the Caps Lock key was in the up position, pressing it once puts it in the down position. Leave it in whatever position it is in after pressing it ONCE, or the test will fail.

b. The diagnostic then asks you to press the SPACE BAR and **hold it down**. This tests the slow repeat function. Continue holding the Space Bar down, in order to complete the next step.

c. Simultaneously press the SOLID APPLE and OPEN APPLE keys while continuing to hold the Space Bar down. This tests the OPEN APPLE key and the fast repeat function.

d. Release all the keys. Now press the SOLID APPLE key first and then the SPACE BAR. This tests the repeat inhibit function. Release these keys when you see the message Keyboard Interrupt Test.

4. Keyboard Interrupt Test

When the keyboard interrupt test comes up on the screen, simply press any key to continue. The keyboard pass/fail status is given, and then the Main Menu appears, unless Test All has been selected.

J. SOUND TESTS

The SOUND diagnostic test has 5 parts: a soft bell, a loud bell, and a sound that gradually grows from soft to loud and then repeats. Use the up/down arrows to select the Sound Tests. After each part:

PRESS SPACE BAR IF YOU HEAR THE SOUND

PRESS RETURN IF YOU DON'T

Upon completion of the test, the pass/fail status is shown. You are then returned to the Main Menu unless Test All was selected.

K. VIDEO TESTS

There are several video tests which check the color shades and the different modes in which the monitor can operate. You will be shown a test pattern and asked to indicate what you observe. What you enter will determine whether the system records a pass or fail for the test.

NOTE: The last test checks the Interlace switch. When you see a horizontal white line on the screen, **STOP** and read the directions for this test. (See the last page of this document.)

1. At the beginning of each video test the screen briefly displays the name of the test and tells you which keys to press to indicate if what you saw was what was expected. Many of the tests use the same test pattern. Usually a picture of Winston Churchill appears in the upper-left corner. A grid of diagonal lines appears in the upper-right corner. The lower-half of the screen displays the following message in LARGE letters:

   If you can read this, and
   the test patterns above
   are clear, press space bar.
   Otherwise, press return.

2. Some displays fill the entire screen. If the display shows what it is supposed to (see the table on the following pages), press SPACE BAR to continue. If the display does not show what it was supposed to, press RETURN.

3. Between patterns the following message flashes:

   TYPE SPACE BAR TO ACCEPT

   TYPE RETURN TO REJECT

   TYPE ESCAPE TO ABORT

   NOTE: With a black-and-white monitor, different colors will be displayed as different shades of grey; some black-and-white monitors are not capable of displaying all the different shades with a single setting of the monitor controls. Do not reject the monitor for this reason.

4. The next two pages give the names of the video tests and describe the patterns which should appear on the monitor.

VIDEO TESTS AND PATTERNS

TEST DISPLAY	B&W MONITOR	COLOR MONITOR
APPLE II HIRES MODE PAGE 1	B&W Pattern only	No Color
APPLE II HIRES MODE PAGE 2	B&W Pattern only	No Color
280 x 192 COLOR HIRES MODE PAGE 1	Negative image	Red and Black
280 x 192 COLOR HIRES MODE PAGE 2	B&W Pattern	Green & White/ or Yellow
SUPER HIRES TEST PAGE 1	B&W Pattern only	No Color
SUPER HIRES TEST PAGE 2	B&W Pattern only	No Color
AHIRES COLOR TEST PAGE 1	Pattern divided into 4 different shades of grey.	Top to bottom, pattern is: violet (pink), blue, green, & gold (orange).
AHIRES COLOR TEST PAGE 2	Pattern divided into 4 different shades of grey.	Top to bottom pattern is: violet (pink), blue, green, & gold (orange)
COLOR BAR & GREY SCALE TEST	16 shades of grey from white on left to black on right--- may be difficult to resolve.	16 shades left to right white, aqua, yellow, green, pink, orange, brown, light blue, medium blue, grey, dark green, light purple, dark blue, magenta and black
APPLE II TEXT MODE PAGE 1	Sentence and alphabet are displayed.	Same as B&W

TEST DISPLAY	B&W MONITOR	COLOR MONITOR
APPLE II TEXT MODE page 2. This screen will display for both B&W and color:		
APPLE /// 40 COLUMN TEXT MODE	16 blocks different shades of grey, with color names printed in each box.	16 colored blocks, color names printed in each box.

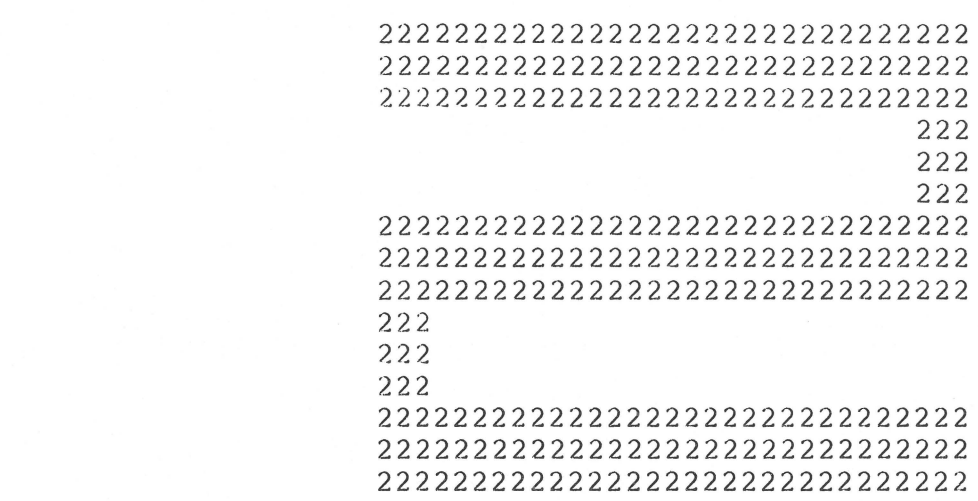

The colors are:

BLACK	MAGENTA	DARK BLUE	LIGHT PURPLE
DARK GREEN	GREY	MEDIUM BLUE	LIGHT BLUE
BROWN	ORANGE	GREY	PINK
GREEN	YELLOW	AQUA	WHITE

APPLE /// 80 COLUMN TEXT MODE	smaller characters across 80 columns	same as B&W

5. Video Interlace Test.

   NOTE: The Interlace switch is located on the left side of the computer halfway back.

   There are two displays used for this test. After seeing the first display (a horizontal white line across the center of the screen), flip the interlace switch to see the other display. The second display is a horizontal and a vertical which cross at the center of the screen.

   a. If the display is not altered when you change the switch position, press RETURN to tell the system that the test failed.

   b. If you can see BOTH displays, one display for each switch position, then press the SPACE BAR to PASS the test.

6. At the end of the Interlace Test turn the Interlace switch to the OFF (0) position.

L. TEST ALL

Accepting this option runs all the tests sequentially. After each test is run you are returned to the main menu where "passed" or "failed" is highlighted. The tests that run are:

RAM
ROM
CALENDAR/CLOCK
DISK
KEYBOARD
SOUND
VIDEO

NOTE: Before running **Test All**, follow the procedure "Make Test Disks (Diskettes)", to make a test diskette for each drive you will test.

1. Skip through the tests using the up/down arrow until TEST ALL is highlighted.

2. Accept this option by pressing RETURN.

3. As each test runs, messages appear on the monitor to tell you what test is running. In some cases you will be asked to enter a response, depending upon what you observe as the test runs. Other tests run automatically and only the results are shown before the next test runs.

Apple Technical Procedures

Apple III and Apple III Plus

Section 6 – Illustrated Parts List

❑ CONTENTS

6.3 Finished Goods Assembly (Figure 1)
6.5 Universal Parallel Printer Board (Figure 2)
6.5 Logic Board (Figure 3)
6.5 Memory Board (Figure 4)
6.7 ProFile Interface Card (Figure 5)

The figures and lists in this section include all piece parts that can be purchased separately from Apple for the Apple III, along with their part numbers. These are the only parts available from Apple. Refer to your *Apple Service Programs Manual* for prices.

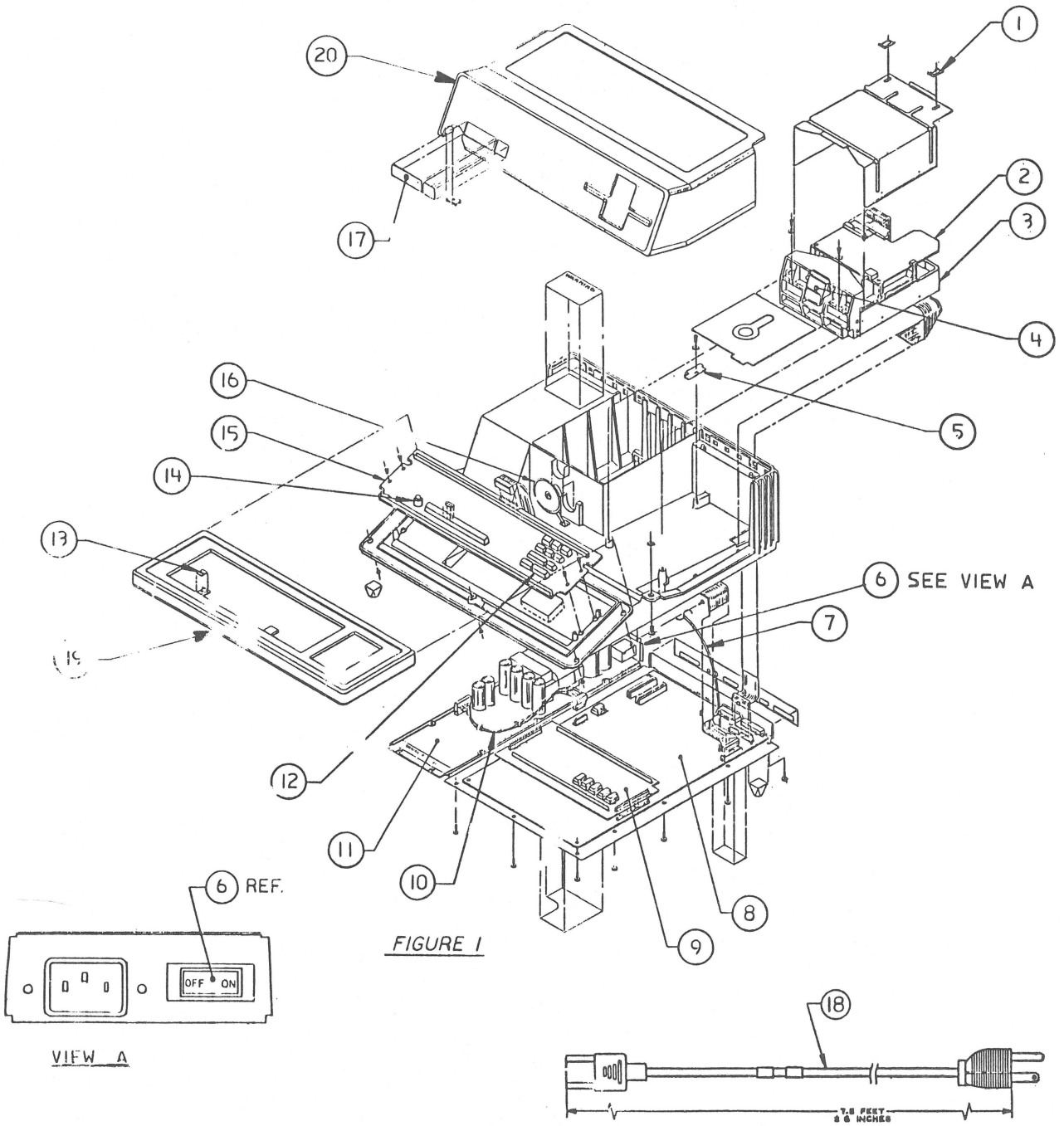

FIGURE 1

VIEW A

❑ APPLE III AND APPLE III PLUS – FINISHED-GOODS ASSEMBLY (FIGURE 1)

Item	Part No.	Description
1	830-0014	Retaining Clip Fastener
2	661-92002	Apple III Disk Analog Card
3	661-92014	Apple III Internal Disk Mechanical Assembly
4	815-0162	Disk Door Clip
5	805-0057	Clip, Disk Hold Down
6	705-0010	Switch, Rocker SPST with ON/OFF Legend
7	590-0032	Cable, Keyboard Apple III
8	661-91069	Apple III Logic Board 5 V
	661-91122	Apple III Plus Logic Board 5 V
9	661-91124	Apple III Memory Board w/RAM
10	590-0017	Cable, Power Supply to Apple III Logic Board (10-pin-to-10-pin connector)
	590-0118	Cable, Power Supply RFI Apple III Plus (10-pin-to-11-pin connector)
11	661-71125	Power Supply, Apple III, Apple III Plus*
12	658-7041	Apple III Plus Keycap Set
13	825-0163	Label, Power-On Lens
14	710-0007	Apple III Lamp
15	661-91022	Apple III Keyboard
	661-95127	Apple III Plus Keyboard
16	600-0009	Speaker Assembly
17	825-0054	Apple Nameplate
18	590-0003	AC Power Cable
19	815-0087	Keyboard Cover, Apple III
	815-0719	Keyboard Cover, Apple III Plus
20	815-0086	Housing—Apple III, Apple III Plus

* Power supply 661-71125 has an 11-pin connector. To use this power supply, you will need cable 590-0118 (with a 10-pin-to-11-pin connector).

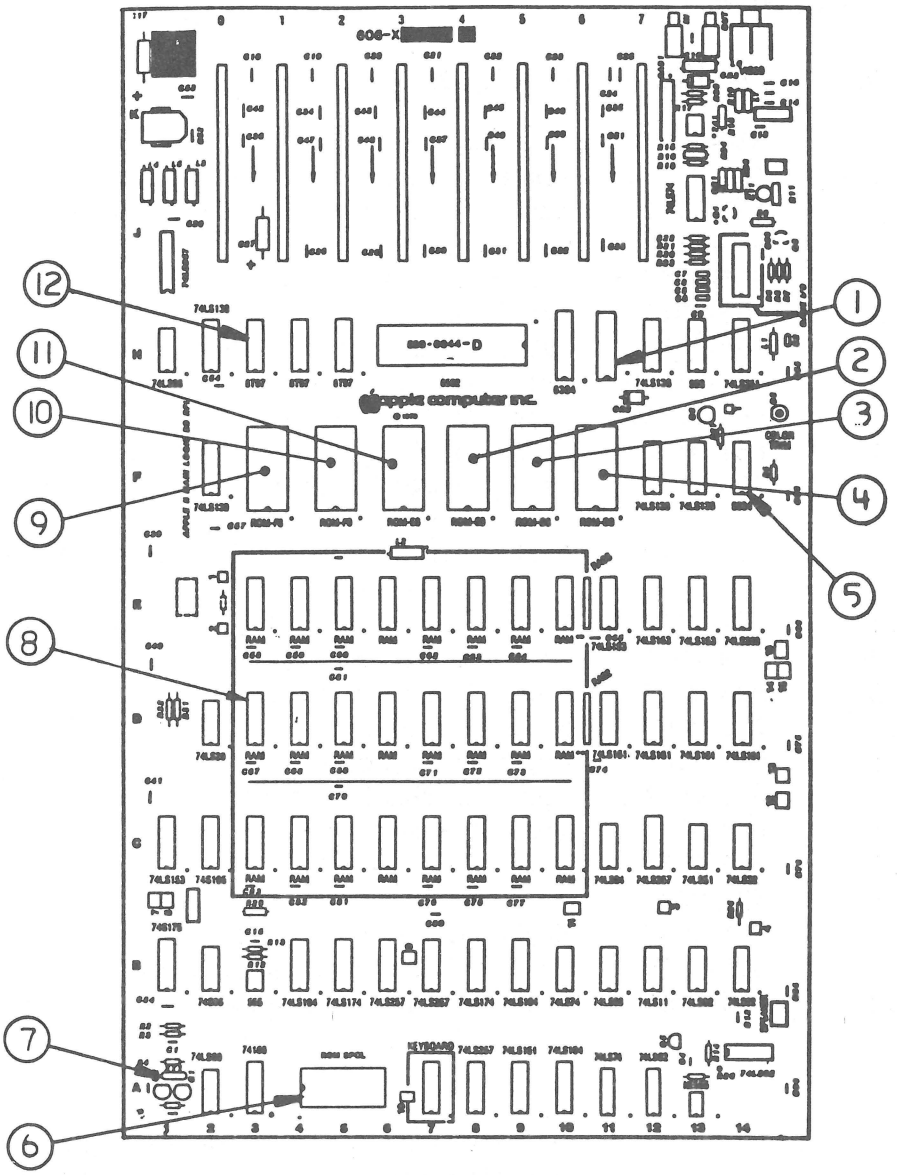

FIGURE 2

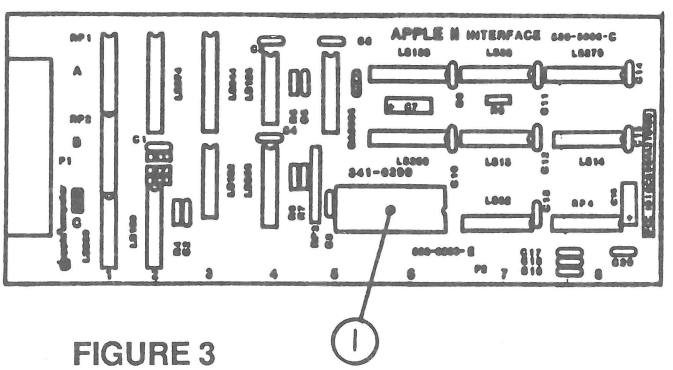

FIGURE 3

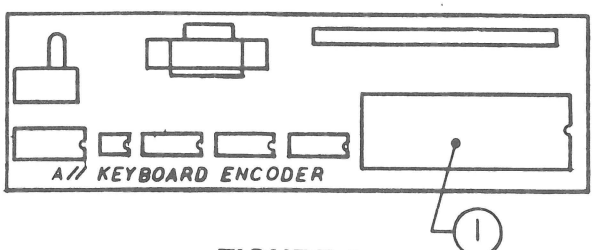

FIGURE 4

APPLE /// and APPLE /// PLUS - UNIVERSAL PARALLEL PRINTER BOARD (Figure 2)

Item	Part No.	Description
1	341-0057	ROM, Parallel Printer Boards
2	590-0128	Cable, Parallel I/F Adapter

APPLE /// and APPLE /// PLUS - LOGIC BOARD (Figure 3)

1	342-0063	IC, PROM CASB256
2	341-0056	IC, PROM CASB65.1
3	342-0061	IC, PROM RAS65
4	197-0001	Crystal, 14.318630 MHz
5	341-0043	PROM, 1024 x 4 U174
6	341-0031	ROM, Boot
7	197-0004	Crystal, Tuning Fork 32.768 KHz
8	341-0046	PROM, 1024 x 4 U180
9	341-0045	PROM, 1024 x 4 U176.2
10	341-0032	ROM, Video Control
11	302-9334	IC, 9334
12	355-9708	IC, 9708 6-CH. 8 Bit A to D
13	341-0035	ROM, Keyboard Encoder
14	515-0050	Three-pin Molex Connector
15	341-0030	ROM Synchrom
16	341-0055	IC, PROM U175-65

APPLE /// and APPLE /// PLUS - MEMORY BOARD (Figure 4)

1	334-0003	IC RAM 64K 200NS w/ Logo

Pictures of the following keyswitches and accessories can be found in **Appendix A:**

705-0009	Reset Keyswitch
705-0012	Arrow Keyswitch
705-0015	Alps Short Stem Keyswitch
705-0070	Alps Long Stem Keyswitch
705-0077	Alps Alpha Lock Keyswitch
815-0772	Straight Adapter

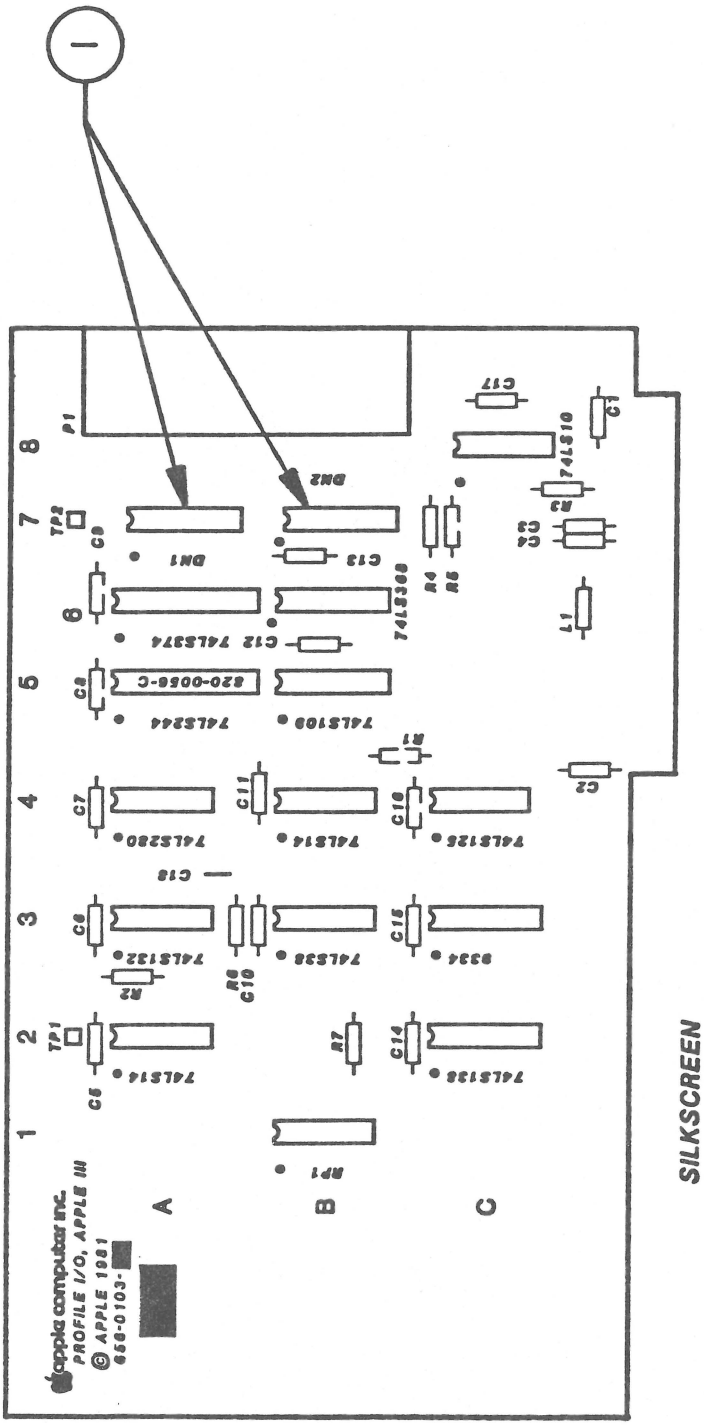
SILKSCREEN
apple computer inc.
PROFILE I/O, APPLE III
© APPLE 1981
656-0103-
A
B
C
1
2
3
4
5
6
7
8
P1
TP1
TP2
J1
J2
74LS14
74LS280
74LS132
74LS244
74LS374
74LS368
74LS138
74LS125
74LS08
74LS38
74LS10
820-0056-C

FIGURE 5

APPLE /// & APPLE /// PLUS - PROFILE INTERFACE CARD (Figure 5)

Item	Part No.	Description
	661-92050	ProFile Interface Card
1	112-0107	Resistor Array, 8 x 100 ohms

Apple /// Technical Procedures

Appendix A

Keyboard and Keyswitch Identification

The Apple /// and /// Plus keyboards have different layouts and are not interchangeable. However, many of the keyswitches on both boards are identical.

The keyswitches used for the Apple /// and /// Plus keyboards are the same, except that the Apple /// Plus uses only the Alps long stem keyswitch. Keyswitch/Keyboard information for the Apple /// can be found in Figure 1, page A.2. Keyswitch/Keyboard information for the Apple /// Plus can be found in Figure 2, page A.3.

> **NOTE:** The procedure to replace a keyswitch is in Section 3 of "You Oughta Know...".

FIGURE 1: Apple III Keyboard

Keyswitch

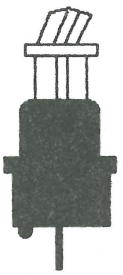

Datanetics

(Obsolete)

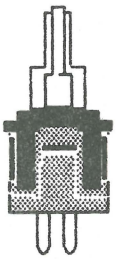

705–0070
Alps Long Stem
("Extended")

815–0772
Straight adapter

705–0015
Alps Short Stem
Used with adapter
815-0772

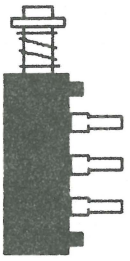

705–0009
Reset

705–0077
Alps Alpha Lock
("Alternate Action")

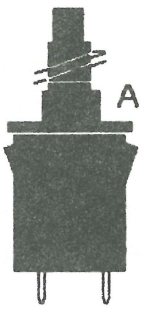

705–0012
A /// Arrow Keys (Cursor Keys)
("dual action," i.e. two–speed)

Current
Version

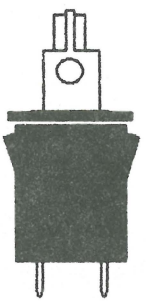

Old
Version
(Obsolete)

Keyboard

Service Part
Number of
Apple III
Keyboard:

661–91022

FIGURE 2: Apple III Plus Keyboard

Keyswitch	Keyboard
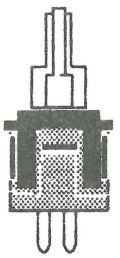 705–0070 Alps Long Stem ("Extended")	Service Part Number of Apple III Keyboard: 661–95127
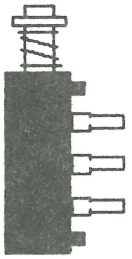 705–0009 Reset 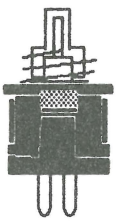 705–0077 Alps Alpha Lock ("Alternate Action")	
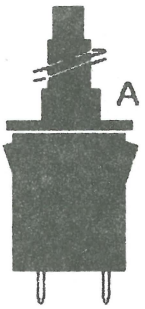 705–0012 A /// Arrow Keys (Cursor Keys) ("dual action," i.e. two–speed)	

Apple Technical Procedures

Disk II

Technical Procedures

❑ TABLE OF CONTENTS

Section 1 – Take-Apart	1.3	Cover
	1.4	Disk Drive Cable
	1.4	Analog Card
Section 2 – Troubleshooting	2.2	Introduction
	2.2	General Information
	2.2	How to Use the Symptom Chart
	2.3	Symptom Chart
	2.4	Analog Card Troubleshooting
	2.4	Materials Required
	2.4	System Setup
	2.4	Visual Inspection
	2.5	Symptoms
	2.5	System Will Not Boot
	2.6	Drive Will Not Read or Write
	2.7	Drive Has Trouble Reading
	2.7	Drive Has Trouble Writing
	2.8	Write-Protect Circuit Malfunctions
Section 3 – Adjustments	3.2	Introduction
	3.3	DSPEED
	3.4	Write Protect Switch
Section 4 – Preventive Maintenance	4.2	Introduction
	4.2	Read/Write Head
	4.3	Head Load Button
	4.4	Motor Drive Belt
Section 5 – Illustrated Parts List	5.3	Finished Goods Assembly (Figure 1)
	5.5	Internal Parts (Figure 2)
	5.7	ICs (Figure 3)

©Apple Computer, Inc., 1982, 1984, 1985, 1986, and 1987. No portion of this document may be reproduced in any form without the written permission of Apple Computer, Inc.

Apple IIGS is a trademark of Apple Computer, Inc. Disk II, Apple, and the Apple logo are registered trademarks of Apple Computer, Inc.

Apple Technical Procedures

Disk II

Section 1 – Take-Apart

❑ CONTENTS

1.3 Cover
1.4 Disk Drive Cable
1.4 Analog Card

Note: If a step is underlined, detailed instructions for that step can be found elsewhere in this section.

❑ COVER

Materials Required

#2 Phillips screwdriver

Remove

1. Turn the drive upside down and remove the four Phillips screws.
2. Set the door end of the unit down on a protective pad.
3. Slide the cover up until it clears the interior parts of the drive. Set the cover aside and set the unit down on its base again.

   Note: If the vent covers (inside the housing) get caught on the frame while you are removing the cover, gently pry them away from the frame while continuing removal. After removal, smooth out any tear or bubble in the covers.

Replace

1. Set the door end of the unit down on a protective pad.
2. Slide the cover down over the drive.
3. Turn the drive upside down and replace the four screws.

❑ DISK DRIVE CABLE

Materials Required

#2 Phillips screwdriver

Remove

1. Remove the cover.
2. Release the catch on the nylon cable holder (mounted on the inside of the back plate) by pressing the tab toward the back of the unit.
3. Disconnect the cable from the analog card and lift the cable free of the drive.

Replace

1. Place the cable into the nylon cable holder so that the toroids (donut-shaped ferrite pieces) are just below the cable holder, and snap the holder shut.
2. Attach the ribbon cable plug to the connector on the analog card, making sure that both rows of pins align with the holes in the plug and that the arrow on the plug points to pin 1 on the connector. (The cable should exit away from the analog card.)
3. Replace the cover.

❑ ANALOG CARD

Materials Required

#2 Phillips screwdriver

Remove

1. Remove the cover.
2. Gently disconnect the read/write head connector from the front of the analog card (Figure 1, #1).
3. Disconnect the ribbon cable from the rear of the card (Figure 1, #2).
4. Disconnect the motor connector from the rear of the card (Figure 1, #3).

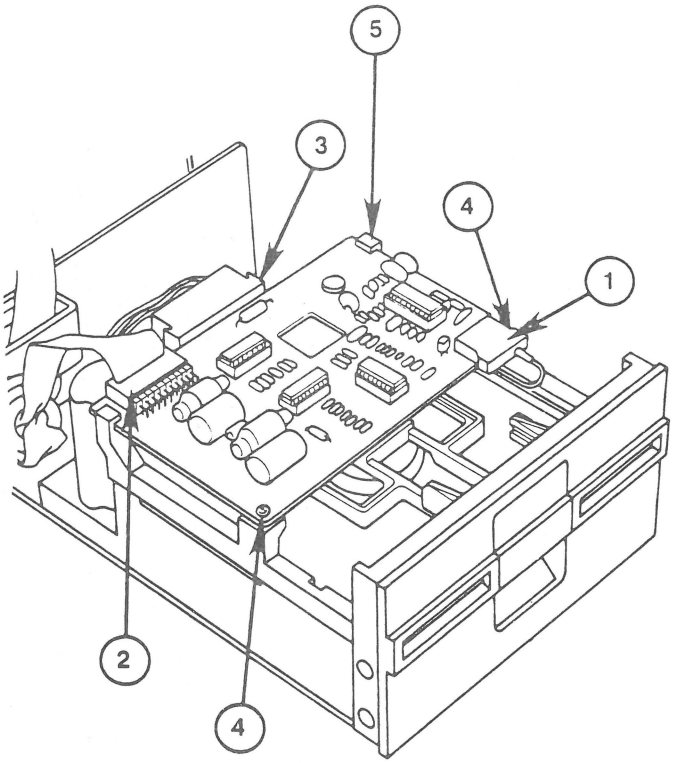

FIGURE 1

5. Remove the two screws at the front of the analog card (Figure 1, #4).

   Note: These screws may have either standard or metric threads. To avoid intermixing, keep the screws with the disk drive they were taken from.

6. Slide the card forward past the retaining slots at the rear (Figure 1, #5), and then lift it out.

Replace

1. Slide the card into position in the retaining slots of the rear support posts (Figure 1, #5).

2. Reinstall the two screws (Figure 1, #4) to hold the card in place.

3. Reconnect the read/write head connector (Figure 1, #1) to the card. Make sure that there is just enough loop in the cable so that it doesn't pull down on the head connector.

4. Reconnect the motor connector (Figure 1, #3) at the rear of the card.

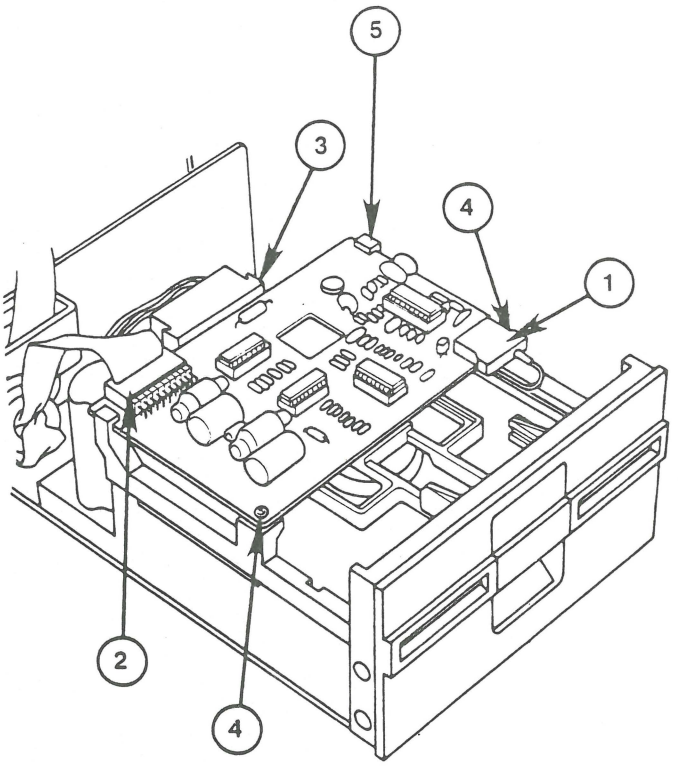

FIGURE 2

5. Reconnect the ribbon cable connector (Figure 2, #2) at the rear of the card, making sure that both rows of pins align with holes in the connector.

6. Replace the cover.

Apple Technical Procedures

Disk II

Section 2 – Troubleshooting

❑ CONTENTS

2.2 Introduction
2.2 General Information
2.2 How to Use the Symptom Chart
2.3 Symptom Chart
2.4 Analog Card Troubleshooting
2.4 Materials Required
2.4 System Setup
2.4 Visual Inspection
2.5 Symptoms
2.5 System Will Not Boot
2.6 Drive Will Not Read or Write
2.7 Drive Has Trouble Reading
2.7 Drive Has Trouble Writing
2.8 Write-Protect Circuit Malfunctions

❑ INTRODUCTION

General Information

These procedures provide guidelines for troubleshooting the Apple® Disk II® disk drive using the following tools:

- *Apple 5.25-Inch Disk Drive Diagnostic*
- Symptom/Corrective Action Chart

How to Use the Symptom Chart

The *Symptom Chart* describes symptoms and appropriate steps to take to correct the failure.

When swapping out modules, remove the suspected faulty module and replace it with a known-good spare module. If the problem still occurs, remove the replacement module, re-install the original module in the Disk II, and try swapping out the next module on the list. Repeat the procedure until the problem no longer occurs. The module you replaced just before the problem disappeared is the faulty one. As a final check of the system, run the disk drive diagnostic.

❑ SYMPTOM CHART

Symptom	Corrective Action
• *Drive comes on but will not boot. System gives I/O errors during normal operation.*	1. Clean read/write head. 2. Adjust DSPEED. 3. Exchange interface cable. 4. Exchange analog card. 5. Exchange mechanical assembly.
• *Drive will not boot. Drive does not come on.*	1. Exchange interface cable. 2. Exchange mechanical assembly. 3. Exchange analog card.
• *Drive makes high pitched whining sound.*	– Exchange mechanical assembly.
• *Drive writes when diskette is protected.*	1. Adjust write-protect switch. 2. Exchange analog card. 3. Exchange mechanical assembly.
• *Drive reads but does not write.*	– Exchange analog card.

❑ ANALOG CARD TROUBLESHOOTING

The following procedures outline the troubleshooting procedures for the Disk II analog card. **Follow all of the procedures in this section to ensure that no potential problems are overlooked.**

Materials Required

Small flatblade screwdriver
Apple II, II Plus, IIe or IIGS system
Disk II (complete) with disk controller card
Known-good Disk II mechanical assembly and interface cable
Copy of *DOS 3.3 System Master* diskette (not write protected)
Blank diskette
Replacement ICs (one each):
- 74LS125
- 2003
- 3470
- 3146

CAUTION: *Be sure to turn off the power to the computer before replacing any of the components on the analog card.*

System Setup

For the analog card to be correctly diagnosed, it must be the only unknown variable in the test system. Using all known-good, verified components, assemble them as follows:

1. Place the analog card to be tested on the known-good mechanical assembly, and connect all cables so that this drive is drive 2 in the system.

2. Place the disk controller card in slot 6 of the computer.

Visual Inspection

Examine the suspect analog card for visual signs of damage. This may take one of several forms:

1. Burned or melted ICs or sockets. Remove each of the four ICs and closely examine them and the sockets. Replace all damaged ICs with good ones. Return all analog cards with damaged sockets to Apple.

2. Capacitor C4 (large capacitor at corner of card) may be visibly damaged (burned, exploded, melted). These cards should be returned to Apple for repair.

3. Components other than the four ICs may be physically damaged and in need of replacement. These cards should be returned to Apple for repair.

CAUTION: *Do not use an eraser to clean gold contacts. Use only a liquid or spray contact cleaner and a clean cloth.*

Symptoms

A malfunctioning analog card may manifest symptoms in one of five ways:

1. Drive 1 will not boot (with bad drive 2 analog card connected).

2. Drive will not read or write (could destroy data).

3. Drive has trouble reading.

4. Drive has trouble writing.

5. The write-protect switch circuit malfunctions.

A troubleshooting procedure for each type of failure follows.

System Will Not Boot

An analog card can be damaged in such a way that when it is connected to drive 2, it keeps drive 1 from booting normally. To test for this condition:

1. Place the analog card to be tested on the drive 2 mechanical assembly and connect the cables from the stepper motor, the read/write head, and the disk controller.

2. Turn on the power to the computer. The DOS diskette should boot and display the Applesoft prompt ( ]) on the screen. If the diskette does not boot, turn off the power to the computer and replace the following devices, one at a time, repeating this step after each swap until the diskette boots.

    IC at D4 (labelled 2003)
    IC at B4 (labelled 74LS125)
    IC at A3 (labelled CA3146)
    IC at B1 (labelled 3470)

If the DOS diskette still fails to boot, place all original ICs in their sockets and return the analog card to Apple.

Drive Will Not Read or Write

If the DOS diskette boots sucessfully in drive 1, perform the following steps:

1. Turn off the power to the computer, remove the *DOS 3.3 System Master* diskette from drive 1 and insert the *Apple 5.25-Inch Disk Drive Diagnostic* diskette in drive 1. Turn the power on. The main menu will be displayed.

2. Refer to the *Disk Drives Technical Procedures*, Section 1, Apple 5.25-Inch Disk Drive Diagnostic, and run the DSPEED test.

3. Referring to Section 3, Adjustments, perform the DSPEED adjustment. If the drive speed indicator does not move to reflect the speed adjustment, this circuit is faulty; turn off the power to the computer and replace the following devices (except those which have been replaced previously), one at a time, repeating this test after each device until the indicator moves reflecting the speed changes.

    IC at B1 (labelled 3470)
    IC at A3 (labelled 3146)
    IC at B4 (labelled 74LS125)
    IC at D4 (labelled 2003)

If you replace all of the ICs on the analog card and the DSPEED indicator still fails to move, place all original ICs in their sockets and return the card to Apple.

Drive Has Trouble Reading

If the drive performed the DSPEED test successfully, perform the following steps:

1. Boot the *DOS 3.3 System Master* in drive 1, then remove it and place it in drive 2.

2. Type CATALOG,D2 and press <Return>. Watch drive 2 for activity. The video screen should display the catalog of the *DOS 3.3 System Master* diskette. If this does not occur, replace the following devices according to the observed symptoms:

Symptom	IC	Location
Head does not move	2003	D4
Disk does not turn	2003	D4
Drive recalibrates repeatedly	3470	B1
I/O ERROR message	3470	B1
" "	3146	A3
" "	74LS125	B4
" "	2003	D4

If you have replaced all of the ICs on the analog card and the catalog still does not display, place all original ICs in their sockets and return the card to Apple.

Drive Has Trouble Writing

If the analog card correctly displays the catalog of drive 2, perform the following steps:

1. Boot the *DOS 3.3 System Master* diskette in drive 1, and then move it to drive 2.

2. Type CATALOG,D2 and press <Return>. The catalog will be displayed on the video screen. Files displayed with an asterisk (*) preceding the filename are locked and may not be deleted. Note that the filename **HELLO** is preceded by an asterisk.

3. Type UNLOCK HELLO and press <Return>.

4. Type CATALOG,D2 and press <Return>. The catalog will be displayed on the video screen. Verify that filename **HELLO** is not preceeded by an asterisk. If you encounter trouble when attempting to unlock the file, turn off the power to the computer and replace the following devices (except those which have been replaced previously), one at a time, repeating this test after each device until the UNLOCK command executes successfully:

   IC at B4 (labelled 74LS125)
   IC at D4 (labelled 2003)
   IC at A3 (labelled 3146)

5. Type LOCK HELLO and press <Return> to re-lock the file.

If you have replaced all of the ICs on the analog card and the file still does not unlock, place all original ICs in their sockets and return the card to Apple.

Write-Protect Circuit Malfunctions

If the write-protect circuit malfunctions:

1. Place a write-protect tab on the *DOS 3.3 System Master* diskette and insert the diskette in drive 2.

2. Repeat steps 2 and 3 above (under "Drive Has Trouble Writing"). The video screen should display **WRITE PROTECT ERROR**. If this does not occur, replace the 74LS125 at location B4 and repeat this test.

If the screen still does not display **WRITE PROTECT ERROR**, place all original ICs in their sockets and return the analog card to Apple.

Apple Technical Procedures

Disk II

Section 3 – Adjustments

❑ CONTENTS

3.3 Introduction
3.3 DSPEED
3.4 Write-Protect Switch

Note: If a step is underlined, detailed instructions for that step can be found in Section 1, Take-Apart.

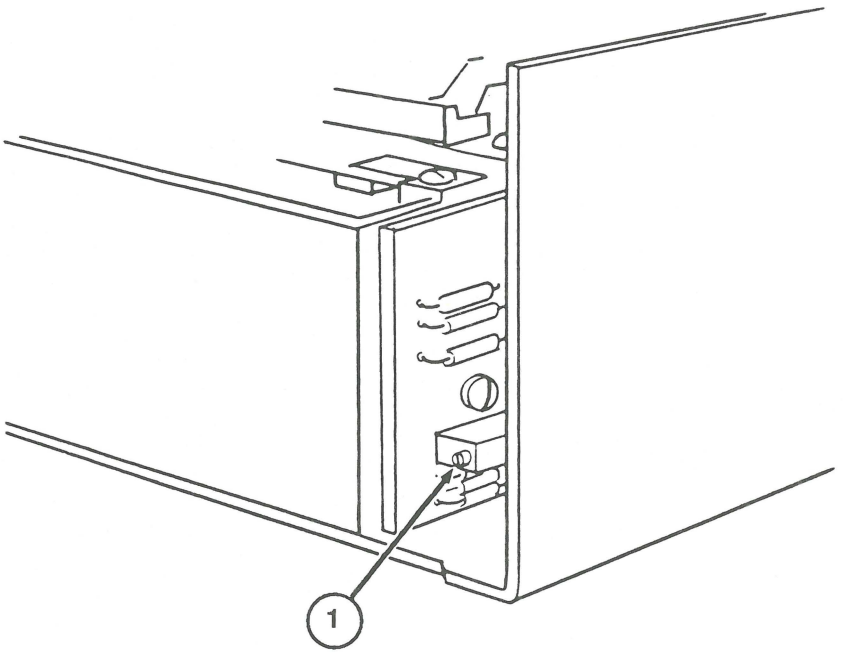

FIGURE 1

❑ INTRODUCTION

These adjustment procedures were written to be used with the *Apple 5.25-Inch Disk Drive Diagnostic*—if the test indicates that you need to adjust the drive speed or if the write-protect test fails. All information on setting up and running the diagnostic is in the *Disk Drives Technical Procedures*, Section 1, 5.25-Inch Disk Drive Diagnostic.

❑ DSPEED

Materials Required

Apple 5.25 Inch Disk Drive Diagnostic diskette
Disk Drives Technical Procedures manual
A small (jeweler's) flatblade screwdriver
Apple II, II Plus, IIe, or IIGS
Known-good Disk II and interface card
Disk II to be adjusted

Making the Adjustment

To adjust the DSPEED (drive motor speed):

1. Remove the cover of the drive to be adjusted.

2. Run the DSPEED diagnostic (see the *Disk Drives Technical Procedures*, Section 1, 5.25-Inch Disk Drive Diagnostic). The diagnostic should be run from a known-good drive connected to the interface card as drive 1, and the drive to be adjusted should be connected as drive 2.

3. Look at the back of the drive mechanism. Locate the motor control board mounted on the edge, and locate the potentiometer that has a screwdriver adjustment on the side (Figure 1, #1). (Do not confuse this potentiometer with the potentiometers on the analog card.)

   Note: When you make the DSPEED adjustment, keep the disk drive flat.

4. The adjustment is extremely sensitive, so turn the adjustment screw very slowly. The indicator on the screen will move back and forth, showing changes of the speed.

5. Adjust the speed so that it stays within the "good" range, as close to 0 as possible. Let the test run for 30 seconds.

6. Press <Escape> to return to the main menu; then repeat the test.

   Does the DSPEED now stay within the "good" range?

   - Yes—Press <Escape> to return to the main menu.

   - No—If the DSPEED cannot be properly adjusted, return the faulty mechanical assembly to Apple.

7. Remove the diagnostic diskette from the drive.

8. Replace the cover.

❑ WRITE-PROTECT SWITCH

Materials Required

Scratch diskette (not write protected)
Small flatblade screwdriver

Making the Adjustment

To adjust the write-protect switch:

1. Note the two setscrews holding the write-protect switch in place (Figure 2, #1 and #2). The switch is located on the front left side of the drive as you face the drive door. The far setscrew (Figure 2, #1) forms a pivot for the switch; the near setscrew (Figure 2, #2) sets the switch position.

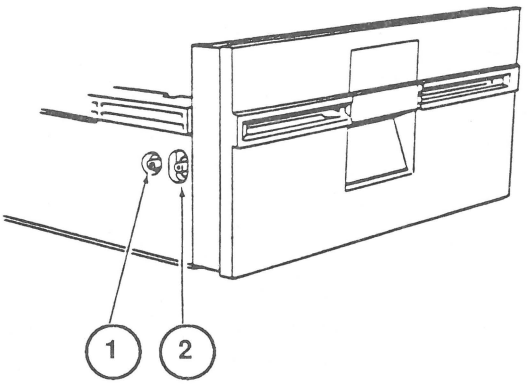

FIGURE 2

2. Insert the scratch diskette all the way and leave the disk drive door open.

3. Loosen the rear setscrew. Then loosen the front setscrew, raise up on it until the switch disables, and tighten the setscrew.

4. Tighten the rear setscrew.

5. Check the adjustment by withdrawing the diskette approximately one-inch. The switch should be enabled.

   Note: If the switch continues to show a disabled condition, reboot and try the procedure again.

6. Verify the adjustment again by pushing the diskette fully into the disk drive and then withdrawing it approximately one inch. The condition should change from disabled to enabled.

Apple Technical Procedures

Disk II

Section 4 – Preventive Maintenance

❑ CONTENTS

4.2 Introduction
4.2 Read/Write Head
4.3 Head Load Button
4.4 Motor Drive Belt

Note: If a step is underlined, detailed instructions for that step can be found in Section 1, Take-Apart.

❑ INTRODUCTION

The read/write head should be cleaned any time the computer or disk drive is being serviced. The head load button should be replaced whenever it is worn or dirty. The motor drive belt should be inspected any time the disk drive is being serviced.

❑ READ/WRITE HEAD

Materials Required

#2 Phillips screwdriver
Cotton swabs
Isopropyl Alcohol (80% alcohol/20% water)

Procedure

To service the read/write head:

1. Remove the case and analog board
2. Clean the guide rails with the isopropyl alcohol. **Do not** use grease.
3. Inspect the head for worn or dull spots in the ceramic. If you find any, replace the mechanical assembly.
4. Clean the head with the isopropyl alcohol.
5. Move the read/write head assembly back and forth along the full length of its travel. Check for any blockage or friction. If there is any, replace the mechanical assembly.
6. Replace the analog board and case.

❑ HEAD LOAD BUTTON

Materials Required

#2 Phillips screwdriver
Needlenose pliers
Head load button

Procedure

To service the head load button:

1. Remove the case and analog board.

2. Lift up the head load arm. If the head load button is worn or dirty, squeeze the top part of the load button with small needlenose pliers, and let the button drop down.

   Note: Some head load buttons are glued. If the glue cannot be broken, send the mechanical assembly to Apple for servicing.

3. Insert the new load button into the head load arm. Press the button until it snaps into place.

4. Replace the analog board and case.

❑ MOTOR DRIVE BELT

Materials Required

#2 Phillips screwdriver
Motor drive belt

Procedure

To service the motor drive belt:

1. Remove the case.
2. Turn the drive upside down. Locate the motor drive belt and check it for cracks, slippage, and elasticity. If the belt is dry or cracked, or if it slips, continue with step 3.
3. Slip the belt off the pulley.
4. Place the new belt around the motor spindle and then slip it around the pulley.
5. Replace the case.

Apple Technical Procedures

Disk II

Section 5 – Illustrated Parts List

❑ CONTENTS

5.3 Finished Goods Assembly (Figure 1)
5.5 Internal Parts (Figure 2)
5.7 ICs (Figure 3)

The figures and lists in this section include all piece parts that can be purchased separately from Apple for the Disk II, along with their part numbers. These are the only parts available from Apple. Refer to your *Apple Service Programs Manual* for prices.

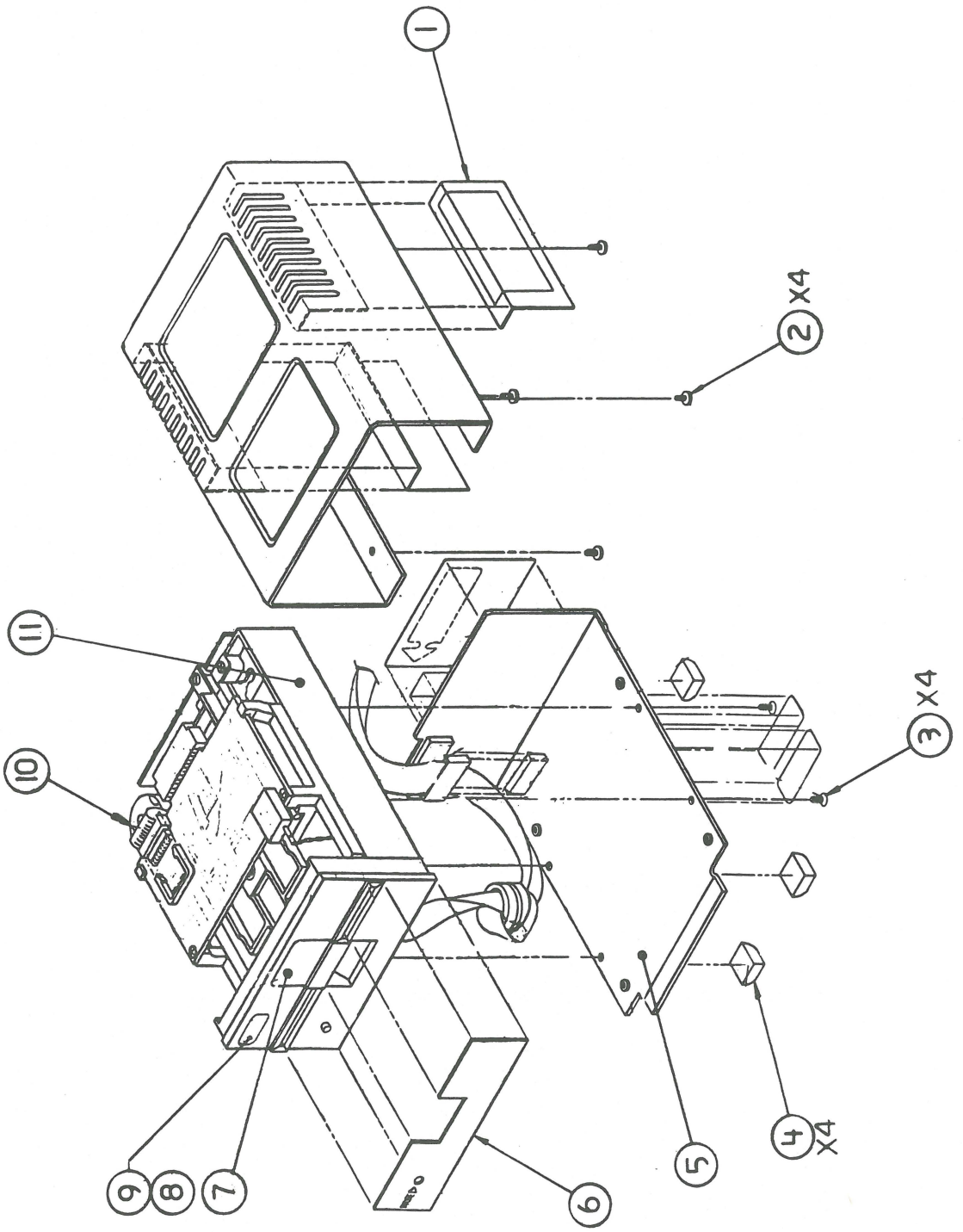
1
2 X4
3 X4
4 X4
5
6
7
8
9
10
11

❑ DISK II – FINISHED GOODS ASSEMBLY (Figure 1)

Item	Part No.	Description
1	825-0009	Cover, Case Slots, Disk II
2	403-1606	Screw, 6-32 x 3/8, DRPHD, Disk II
3	400-3604	Screw, 6-32 x 1/4, Pozi-Drive Flat Head, Disk II
4	865-0001	Rubber Feet
5	805-0005	Chassis Base, Disk II
6	825-0005	Disk II Front Name Plate Label
7	U815-0066	Door & Hinge Assembly
8	825-0011	Multiple Drive ID #1, Label
9	825-0012	Multiple Drive ID #2, Label
10	590-0031	Disk II Cable Assembly, 15" LG
11	661-92012	Disk II Mechanical Assembly

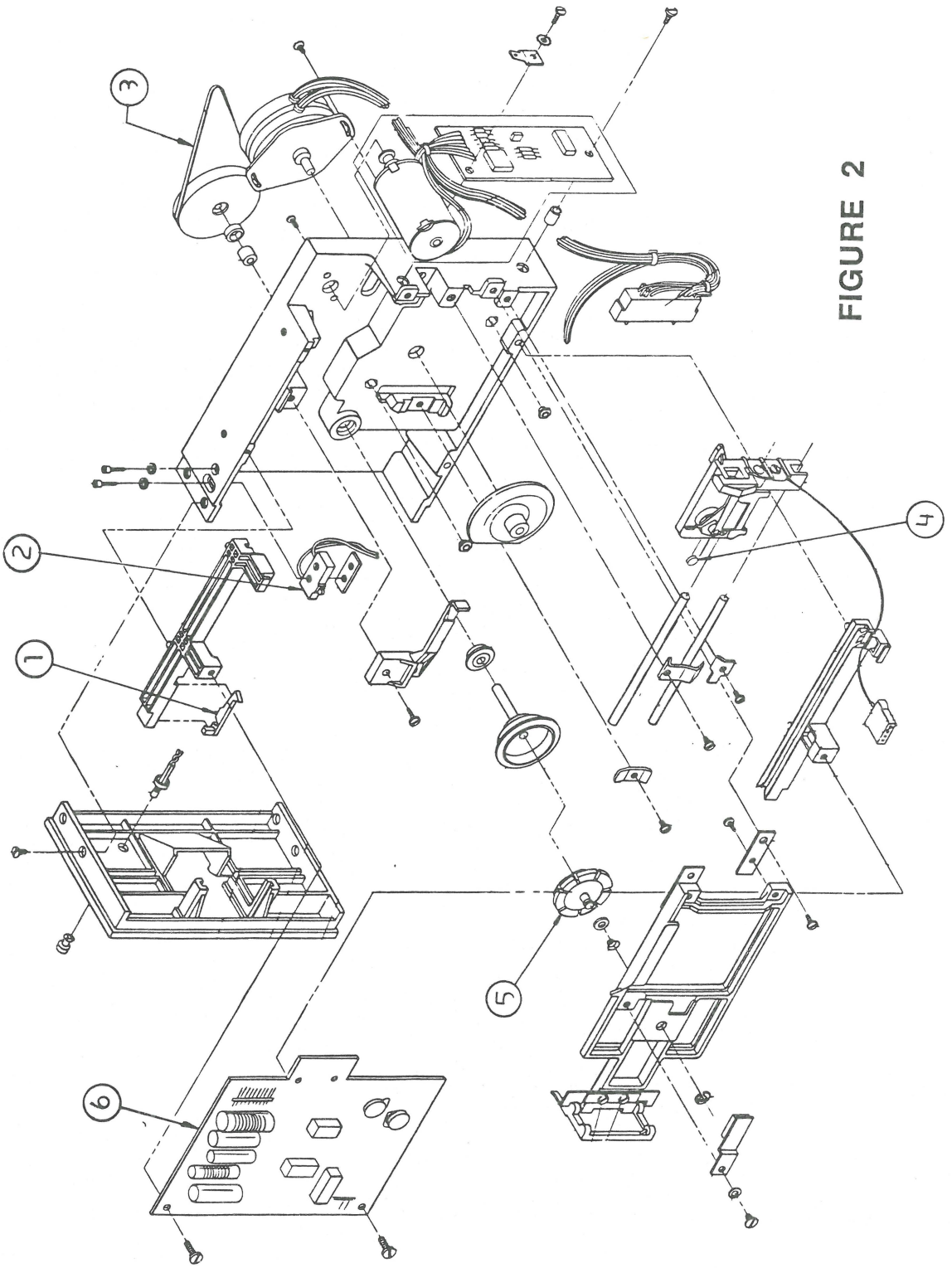

FIGURE 2

❑ DISK II – INTERNAL PARTS (Figure 2)

Item	Part No.	Description
1	815-0377	Write Protect Actuator (Alps)
	U815-0073	Write Protect Actuator (Shugart)
2	U705-0005	Write Protect Switch DII-III
3	U880-0002	Disk Drive Belt
4	U815-0064	Load Button
5	U815-0067	Disk II Collet Hub
6	661-92001	Disk II Analog Card

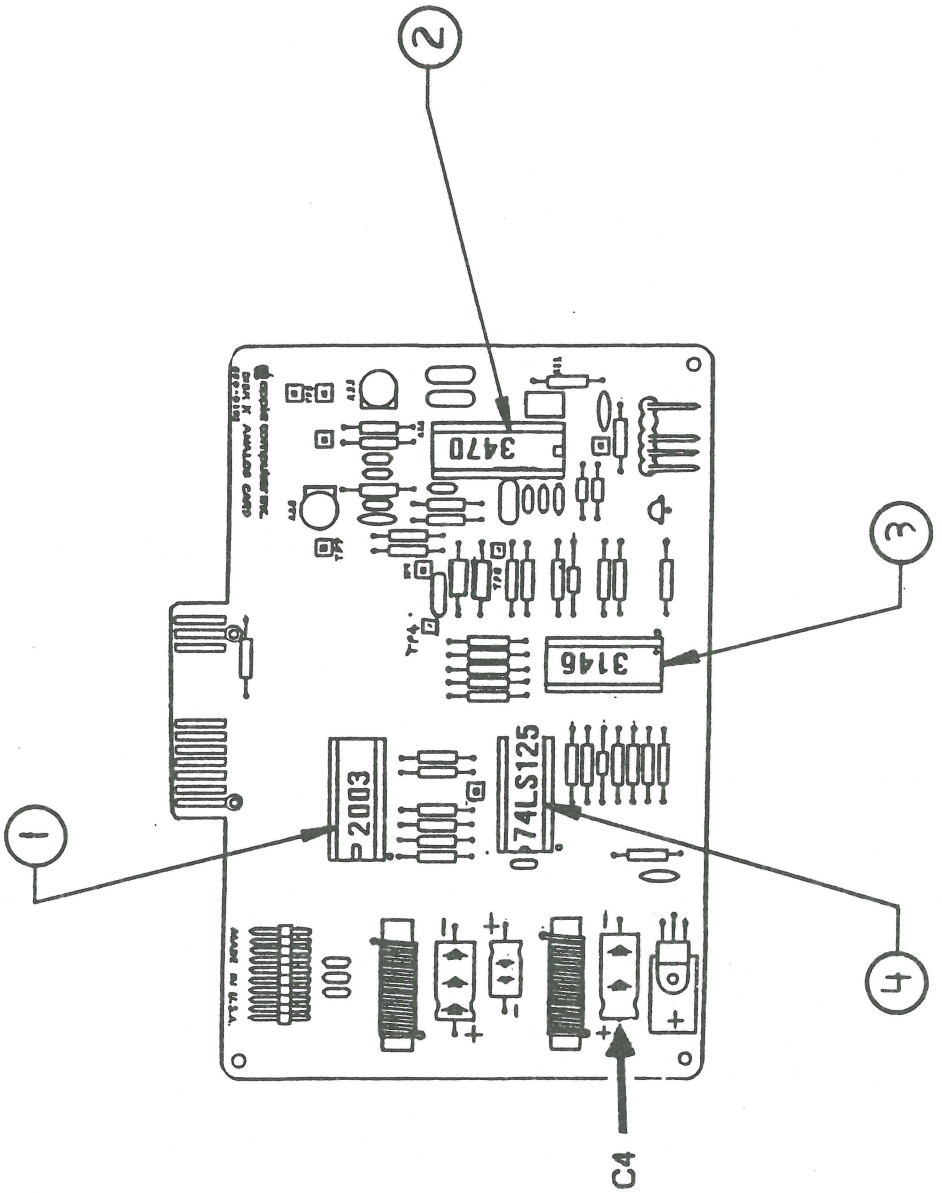
2
3470
3
3146
1
2003
74LS125
4
C4

❑ DISK II - ICs (Figure 3)

Item	Part No.	Description
1	327-2003	IC 2003A
2	355-3470	IC MC3470
3	351-3146	IC 3146
4	306-0125	IC 74LS125

Apple Technical Procedures

Disk III

Technical Procedures

❑ TABLE OF CONTENTS

Section 1 – Take-Apart	1.2	Case
	1.3	Shield and Ribbon Cable
	1.6	Analog Card
	1.8	Drive Door
Section 2 – Troubleshooting	2.2	Introduction
	2.2	Materials Required
	2.2	System Setup
	2.3	Visual Inspection
	2.4	Troubleshooting
	2.4	Symptoms
	2.4	System Will Not Boot
	2.5	Drive Will Not Read or Write
	2.5	Drive Has Trouble Reading .
	2.6	Drive Has Trouble Writing
	2.7	Write-Protect Circuit Malfunctions
	2.8	Diskette-Switched Circuit Malfunctions
Section 3 – Adjustments	3.3	Introduction
	3.3	DSPEED
	3.3	Making the Adjustment
	3.4	Write-Protect Switch
	3.4	Making the Adjustment
Section 4 – Preventive Maintenance	4.2	Introduction
	4.2	Read/Write Head
	4.3	Head Load Button
	4.3	Motor Drive Belt

Section 5 – Illustrated Parts List

5.3 Complete Assembly (Figure 1)
5.5 Internal Parts (Figure 2)
5.7 Analog Card (Figure 3)

©Apple Computer, Inc., 1982, 1984, 1985, 1986, and 1987. No portion of this document may be reproduced in any form without the written permission of Apple Computer, Inc.

Apple and the Apple logo are registered trademarks of Apple Computer, Inc.

Apple Technical Procedures

Disk III

Section 1 – Take-Apart

❑ CONTENTS

1.2 Case
1.3 Shield and Ribbon Cable
1.6 Analog Card
1.8 Drive Door

Note: If a step is underlined, detailed instructions for that step can be found elsewhere in this section.

❑ CASE

Materials Required

#2 Phillips screwdriver

Remove

1. Turn the drive over with the bottom-side up and remove the four Phillips screws.
2. Lift the bottom cover up from the rear and remove it. Turn the unit so that the top side is up and the back of the unit is toward you.
3. Remove the single Phillips screw from the back panel.
4. Holding on to the bottom front of the top cover, pull the cover slightly forward and up until it clears the interior parts of the drive. Set cover aside.

Replace

1. Replace the top cover. With the unit top side up, set the cover over the back edge of the Disk III; then pull the cover slightly forward as you slide it down over the disk drive door.
2. Replace the single Phillips screw on the back panel.
3. Turn the drive over and replace the bottom cover.
4. Replace the four Phillips screws and turn the drive top side up.

❑ SHIELD AND RIBBON CABLE

Materials Required

#2 Phillips screwdriver

Remove

1. Remove the case.

2. Remove the flat cable from the back of the drive by pressing the strain relief guard (see Figure 1) out of the slot and removing the cable.

   Note: It can be difficult to release the strain relief guard. If so, slip a screwdriver inside the metal shield and pry down on the guard while simultaneously pulling down and out from outside. (You may use large pliers to compress the guard enough to separate it from the mounting bracket, but be sure you don't crush the cable.) The strain relief guard will come apart in two pieces.

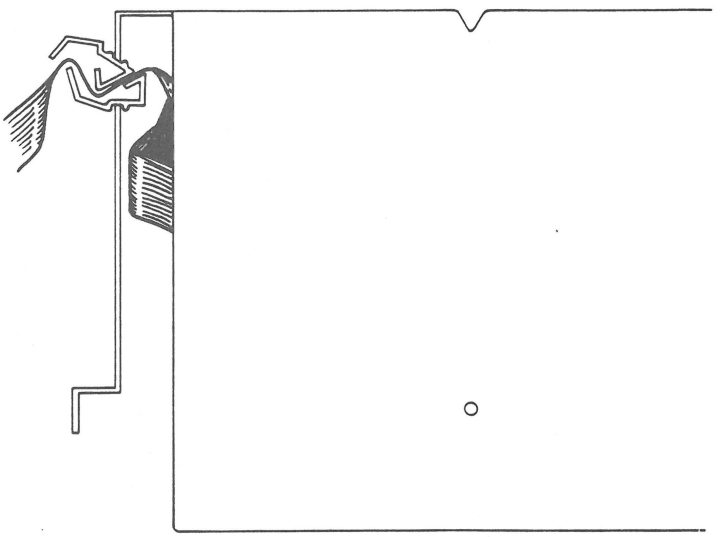

FIGURE 1

3. Remove the four Phillips screws holding the metal shield to the drive chassis.

4. Slide the metal shield cover back and off the drive, being careful not to pull on the cable as it is still connected to the analog card.

5. Disconnect the ribbon cable connector from the analog card (Figure 2, #2). It might be fastened very securely, so grasp the connector and pull back firmly until it disconnects. It may help to wiggle it gently back and forth as you pull back, but be careful not to bend the connector pins.

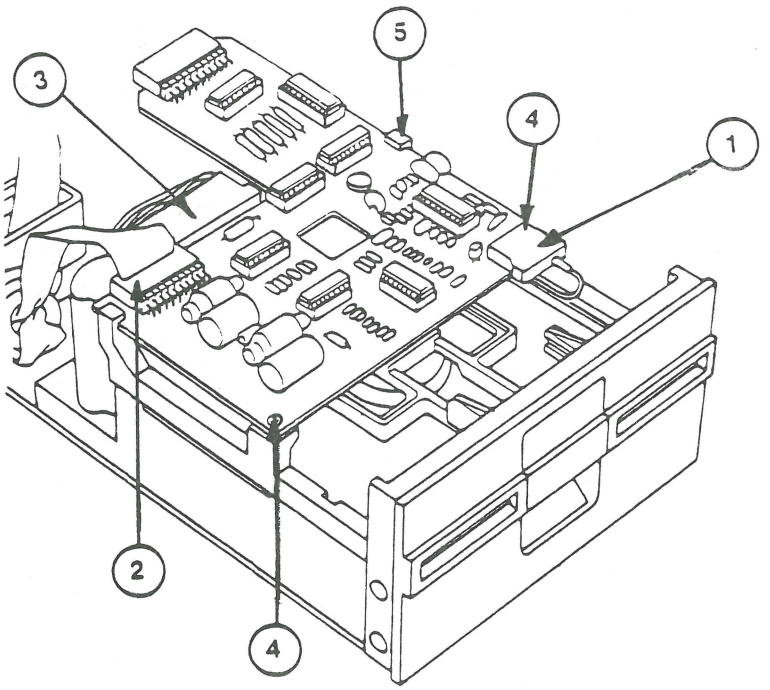

FIGURE 2

6. If you are replacing the ribbon cable, twist the cable connector slightly, push it through the toroids, and remove the toroids from the cable.

Replace

1. Place the two toroids onto one end of the replacement cable, looping the cable through the toroids. Leave about three inches of cable between the toroids and the connector (see Figure 3, #1).

2. Place the cable just above the toroids into the nylon cable holder and snap the holder shut.

FIGURE 3

3. Attach the ribbon cable connector to the analog card, making sure that both rows of pins align with the holes in the connector (Figure 2, #2).

4. Replace the strain relief guard at the back of the metal shield. Fit the guard as closely as possible to the toroid while leaving yourself enough cable to work with.

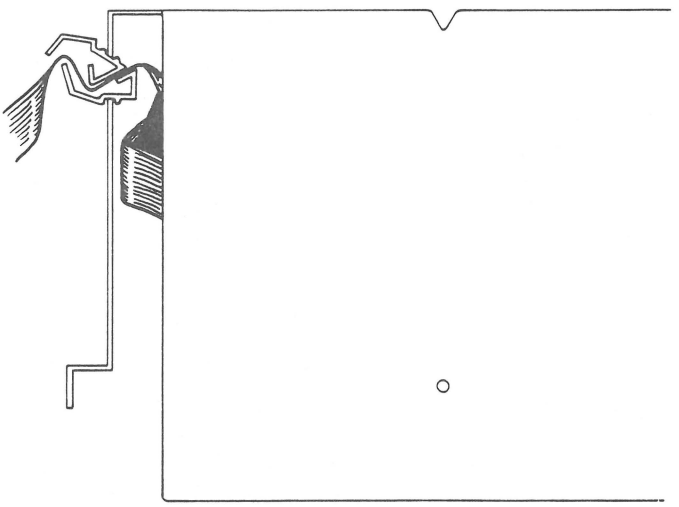

FIGURE 4

Make an "S" in the cable right next to the metal shield. Fit the bottom portion of the "S" into the one part of the strain relief with the triangle side fitting inside the metal shield. The other part of the strain relief fits with the triangle against the cable and into the lower portion of the strain relief. The top part then slips inside the metal shield (Figure 4).

5. Replace the four screws on the sides of the metal shield.

6. Replace the case.

❑ ANALOG CARD

Materials Required

#2 Phillips screwdriver

Remove

1. Remove the case and drive shield.

2. Disconnect the read/write head connector from the front of the analog card (Figure 5, #1).

3. Disconnect the ribbon cable connector at the rear of the analog card (Figure 5, #2).

4. Remove the two screws at the front of the analog card (Figure 5, #4).

5. Slide the analog card back past the retaining slots at the rear, and then lift it out (Figure 5, #5).

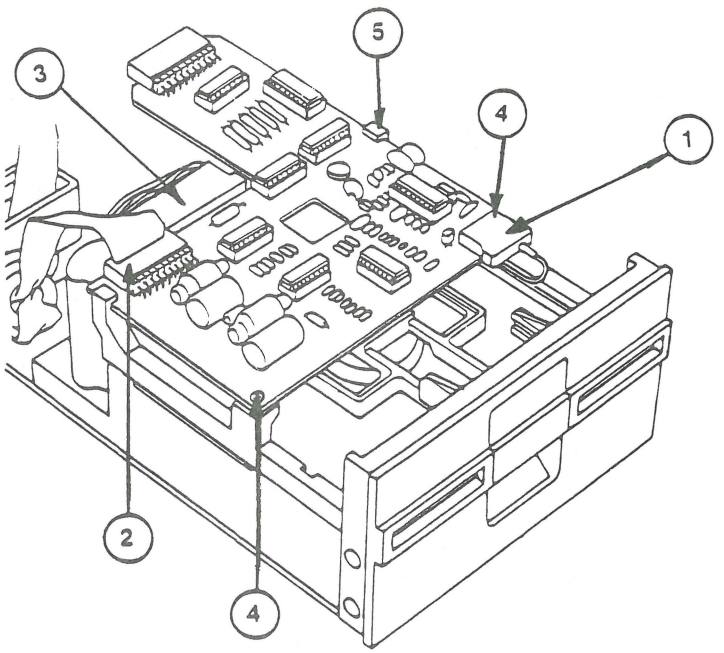

FIGURE 5

Replace

1. Slide the analog card through the retaining slots (Figure 5, #5) and into position.

2. Replace the two screws to hold the board in place (Figure 5, #4).

3. Attach the read/write head connector to the front of the analog card (Figure 5, #1). Ensure that there is just enough loop in the cable so that it doesn't pull down on the molex connector.

4. Attach the ribbon cable connector at the rear of the analog card (Figure 5, #2).

5. Replace the drive shield and case.

❑ DRIVE DOOR

Materials Required

#2 Phillips screwdriver

Remove

1. Remove the case.
2. Remove the four Phillips screws, two on each side of the front bezel (panel) of the unit.
3. Tilt the bezel forward.
4. Remove the two screws that hold the door in place (Figure 6, #2), and remove the door assembly.

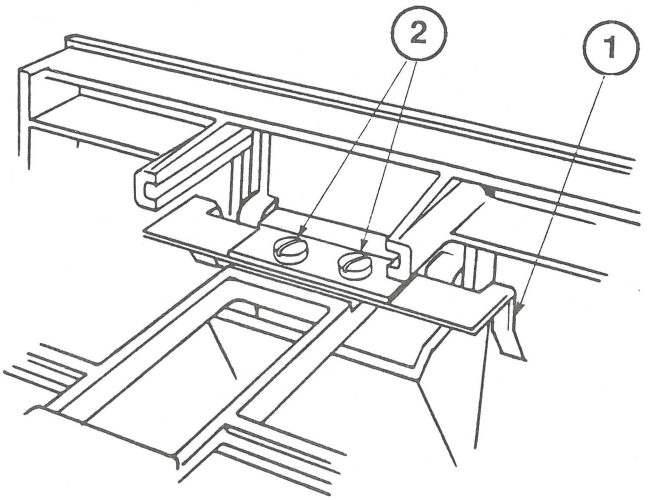

FIGURE 6

Replace

1. Set the new door in place, noting the position of the door guides (Figure 6, #1), and replace the screws to hold it in place.
2. Replace the bezel and two of the screws to hold it in place.
3. Insert a scratch diskette into the drive and allow it to center properly.

4. While gently closing the drive door, observe the two guide bars (Figure 6, #1), which are visible when viewed from the back of the drive looking toward the front. The guide should not bind against the diskette or cause it to buckle.

5. If there is binding, or if the door is crooked, unscrew the bezel and tilt it forward so that you can loosen the two screws that hold the door in place. Make sure the two plastic protrusions on the top of the door slide through the two plastic guides on the bezel and that the door looks centered.

6. With the bezel tilted forward, tighten the two screws to hold the door into the correct position.

7. Put the bezel into its normal position and replace the remaining two screws (Figure 6, #2).

8. Replace the case.

Apple Technical Procedures

Disk III

Section 2 – Troubleshooting

❑ CONTENTS

2.2 Introduction
2.2 Materials Required
2.2 System Setup
2.3 Visual Inspection
2.4 Troubleshooting
2.4 Symptoms
2.4 System Will Not Boot
2.5 Drive Will Not Read or Write
2.5 Drive Has Trouble Reading .
2.6 Drive Has Trouble Writing
2.7 Write-Protect Circuit Malfunctions
2.8 Diskette-Switched Circuit Malfunctions

Note: If a step is underlined, detailed instructions for that step can be found in Section 1, Take-Apart.

❑ INTRODUCTION

The following pages outline the troubleshooting procedures for the Disk III disk drive analog card. **Follow all of the procedures in this section to ensure that no potential problems are overlooked.**

Materials Required

Small flatblade screwdriver
Apple III system with video display
Disk III mechanical assembly
External Disk III Interface Cable
Apple II Emulation diskette
Copy of *DOS 3.3 System Master* diskette (not write protected)
Copy of *Apple Business Basic* diskette
Blank diskette
Replacement ICs (one each):
- 74LS125
- 2003
- 3470 (Motorola)
- 3146
- 74LS74
- 74LS32

CAUTION: *Be sure to turn off the power to the computer before replacing any of the components on the analog card.*

System Setup

For the analog card to be correctly diagnosed, it must be the only unknown variable in the test system. So, using all known-good, verified components, assemble them as follows:

1. Place the analog card to be tested on the external drive mechanical assembly and connect the stepper motor cable and read/write head cable.

2. Connect the external cable between the analog card and the external drive port of the Apple III.

Visual Inspection

Inspect the analog card for out-of-date versions by looking for printed circuit board (PCB) reworking, such as:

1. R32 (location D1) is missing.

2. IC at location E1 is missing.

3. Jumper wires soldered to the back of the board.

Return to Apple all analog cards with any of the above conditions. Next, examine the suspect analog card for damage such as:

1. Burned or melted ICs or sockets. Remove each of the six ICs and closely examine them and the sockets. Replace all damaged ICs with good ones. Return all analog cards with damaged sockets to Apple.

2. Capacitor C4 (large capacitor at corner of card) may be visibly damaged (burned, exploded, melted). These cards should be returned to Apple for repair.

3. Components other than the six ICs and capacitor C4 may be physically damaged and in need of replacement. These cards should be returned to Apple for repair.

WARNING: *Do not use an eraser to clean gold contacts. Use only a liquid or spray contact cleaner and a clean cloth.*

❑ TROUBLESHOOTING

Symptoms

A malfunctioning analog card may manifest one of the following five symptoms:

1. Drive 1 will not boot (with bad external drive analog card connected).
2. Drive will not read or write (could destroy data).
3. Drive has trouble reading.
4. Drive has trouble writing.
5. The diskette-switched circuit malfunctions.

A troubleshooting procedure for each of the above failure mode follows.

System Will Not Boot

It is possible for an analog card to be damaged in such a way that when it is connected to the external drive it keeps the internal drive from booting normally. To test for this condition:

1. Place the analog card to be tested on the external drive mechanical assembly, and connect the cables from the stepper motor, the read/write head, and connect the drive to the computer.
2. Place the *Apple II Emulation* diskette in the internal drive and turn on the power to the computer. The Emulation display will appear on the video screen. If the diskette does not boot, turn off the power to the computer and replace the following devices one at a time, repeating this step after each replacement until the diskette boots.

   IC at C4 (labelled 2003)
   IC at G2 (labelled 74LS125)
   IC at A3 (labelled CA3146)
   IC at B1 (labelled 3470)
   IC at E2 (labelled 74LS74)

If the emulation diskette still fails to boot, place all original ICs in their sockets, and return the analog card to Apple.

Drive Will Not Read or Write

If the emulation diskette boots successfully in the internal drive, perform the following steps:

1. Run the DSPEED test from the *Apple 5.25-Inch Disk Drive Diagnostic*. For instructions on setting up and running the diagnostic, refer to the "5.25-Inch Disk Drive Diagnostic" section in *Disk Drives Technical Procedures*.

2. Locate the DSPEED adjustment screw on the motor control board at the right rear of the mechanical assembly. Adjust this potentiometer while observing the drive speed indicator on the video display. If the value changes and the arrow moves as you turn the adjustment, this portion of the circuit is functional; proceed to the "Drive Has Trouble Reading" procedure. If the drive speed indicator does **not** move to reflect the speed adjustment, this circuit is faulty; turn off the power to the computer and replace the following devices (except those which have been replaced previously), one at a time, repeating this test after each device until the indicator moves reflecting the speed changes (then proceed to the DSPEED adjustment, Section 3, to adjust the motor speed to specification):

   IC at B1 (labelled 3470)
   IC at A3 (labelled 3146)
   IC at G4 (labelled 74LS125)
   IC at C4 (labelled 2003)
   IC at E2 (labelled 74LS74)
   IC at F1 (labelled 74LS32)

   If you replace all of the ICs on the analog card and the DSPEED indicator still fails to move, place all original ICs in their sockets and return the card to Apple.

Drive Has Trouble Reading

If the drive will perform the DSPEED test successfully, perform the following steps:

1. Boot the *Apple II Emulation* diskette in the internal drive.

2. Once the Apple II Emulation menu appears on the screen, complete the boot process by placing the *DOS 3.3 System Master* diskette in the internal drive and pressing <Return>.

3. Move the DOS 3.3 diskette to the external drive.

4. Type CATALOG,D2, press <Return>, and watch the external drive for activity. The video screen should display the catalog of the *DOS 3.3 System Master* diskette. If this does not occur, replace the following devices according to the observed symptoms:

Symptom	IC	Location
In-Use light off	74LS32	F1
" "	74LS125	G2
" "	2003	C4
" "	74LS74	E2
Motor off,		
In-Use LED on	74LS32	F1
Head does not move	2003	C4
Head moves erratically	2003	C4
Recalibrates repeatedly	3470	B1
I/O ERROR message	3470	B1
" "	3146	A3
" "	74LS125	G2
" "	2003	C4
" "	74LS32	F1
" "	74LS74	E2

If you have replaced all of the ICs on the analog card and the catalog still does not appear on the monitor, place all original ICs in their sockets and return the card to Apple.

Drive Has Trouble Writing

If the analog card correctly displays the catalog of the external drive, perform the following steps:

1. Type CATALOG,D2 and press <Return>. The catalog will be displayed on the video screen. Files displayed with an asterisk (*) preceding the filename are locked and may not be deleted. Note that filename **HELLO** is preceded by an asterisk.

2. Type UNLOCK HELLO and press <Return>.

3. Type CATALOG and press <Return>. The catalog will be displayed on the video screen. Verify that filename **HELLO** is not preceeded by an asterisk. If you encounter trouble when attempting to unlock the file, turn off the power to the computer and replace the following devices (except those which have been replaced previously), one at a time, repeating this test after each device until the UNLOCK command executes successfully:

Symptom	IC	Location
I/O ERROR message	3470	B1
" "	3146	A3
WRITE PROTECTED error message	74LS125	G2
" "	74LS74	E2
Drive recalibrates repeatedly	3470	B1

4. Type LOCK HELLO and press <Return> to re-lock the file.

If you have replaced all of the ICs on the analog card and you still experience trouble writing to the drive, place all original ICs in their sockets and return the card to Apple. Otherwise, go on to the next procedure.

Write Protect Circuit Malfunctions

If the write-protect circuit malfunctions:

1. Place a write-protect tab on the *DOS 3.3 System Master* diskette and insert the diskette in the external drive.

2. Repeat steps 2 and 3 above (in the "Drive Has Trouble Writing" procedure). The video screen should display the **WRITE PROTECTED** error message. If this does not occur, replace the following device (unless it has been replaced previously) according to the symptom listed, and repeat this test.

Symptom	IC	Location
File remains locked	74LS125	G2
" "	74LS74	E2
I/O ERROR message	74LS125	G2
" "	74LS74	E2
" "	74LS32	F1

If the screen still does not display the **WRITE PROTECTED** message, place all original ICs in their sockets and return the analog card to Apple.

Diskette-Switched Circuit Malfunctions

The diskette-switched circuit detects the changing of the diskette. Due to the difference in the way the computer reads the directory in Apple II-emulation mode, this circuit must be tested in Apple II-emulation mode as well as in Apple III mode.

1. Boot the *Apple Business Basic* diskette in the internal drive and then move it to the external drive.

2. Type CATALOG .D2 and press <Return>. The disk catalog will display on the video screen.

3. Rest the eraser end of a common pencil lightly on the cam of the external drive mechanism and hold it there while carefully observing it. Type CATALOG .D2 again and press <Return>. Watch the drive cam for movement; you should **not** feel the pencil move. If the cam does move, replace the following devices (unless they have been replaced previously) one at a time, and repeat this test. If the analog card still fails to function properly, place all original ICs in their sockets and return the card to Apple. Otherwise, go on to the next step.

   IC at E2 (labelled 74LS74)
   IC at F1 (labelled 74LS32)

4. Remove the diskette from the external drive and re-insert it.

5. With the pencil eraser resting on the drive cam, type CATALOG .D2 and press <Return> and observe the cam for movement; you **should** feel the pencil move. If the cam does not move, replace the following devices (unless they have been replaced previously) one at a time, and repeat this test. If the analog card still fails to function properly, place all original ICs in their sockets and return the card to Apple. Otherwise, go on to the next step.

   IC at E2 (labelled 74LS74)
   IC at F1 (labelled 74LS32)

6. Repeat step 5 (above). This time, the cam should **not** move. If the cam moves, replace the following devices (unless they have been replaced previously) one at a time, and repeat this test. If the analog card still fails to function properly, place all original ICs in their sockets and return the card to Apple. Otherwise, go on to the next step.

   IC at E2 (labelled 74LS74)
   IC at F1 (labelled 74LS32)

7. Boot the *Apple II Emulation* diskette by placing it in the internal drive and turning on the power to the computer. The Emulation display will show on the video screen.

8. Remove the *Apple II Emulation* diskette and boot the *DOS 3.3 System Master* diskette by inserting it in the internal drive and pressing <Return>. Once it has booted, move it to the external drive.

9. Type CATALOG,D2 and press <Return>. After the catalog is displayed, press <Return>. the Applesoft prompt ( ]) will appear on the video screen.

10. Place the pencil eraser on the drive cam. Type CATALOG again and press <Return>. The cam should **not** move. If the cam moves, replace the following devices (unless they have been replaced previously) one at a time and repeat this test. If the analog card still fails to function properly, place all original ICs in their sockets and return the card to Apple.

    IC at E2 (labelled 74LS74)
    IC at F1 (labelled 74LS32)

11. Remove the *DOS 3.3 System Master* diskette from the external drive and replace it in the same drive. Repeat step 10 (above) and check that the cam does **not** move. If the cam moves, replace the following devices (unless they have been replaced previously) one at a time, and repeat this test. If the analog card still fails to function properly, place all original ICs in their sockets and return the card to Apple.

    IC at E2 (labelled 74LS74)
    IC at F1 (labelled 74LS32)

Apple Technical Procedures

Disk III

Section 3 – Adjustments

❑ CONTENTS

3.3 Introduction
3.3 DSPEED
3.3 Making the Adjustment
3.4 Write-Protect Switch
3.4 Making the Adjustment

Note: If a step is underlined, detailed instructions for that step can be found in Section 1, Take-Apart.

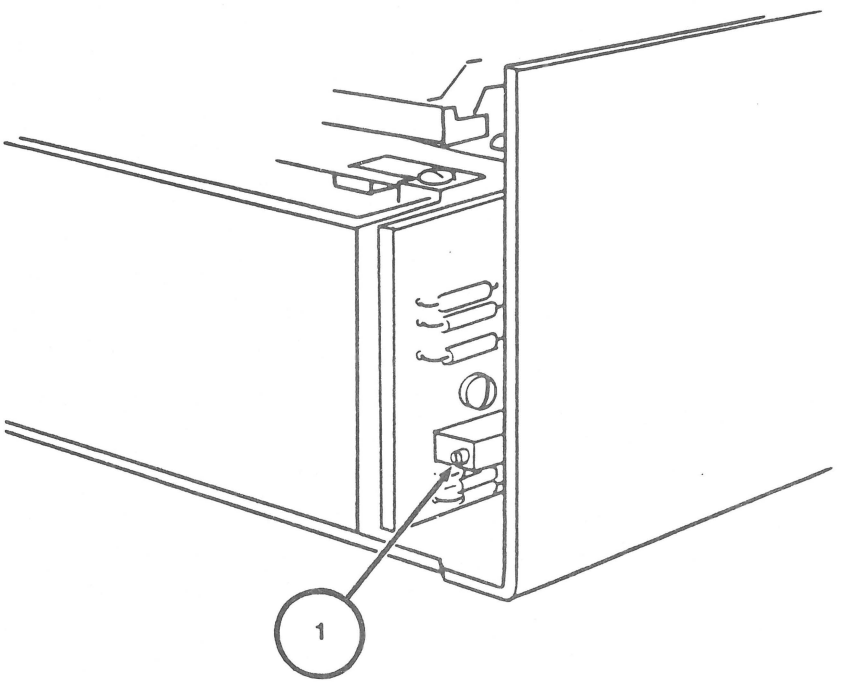

FIGURE 1

❑ INTRODUCTION

These adjustment procedures were written to be used with the *Apple 5.25-Inch Disk Drive Diagnostic*—if the test indicates that you need to adjust the drive speed or if the write-protect test fails. All information on setting up and running the diagnostic is in the *Disk Drives Technical Procedures*, Section 1, 5.25-Inch Disk Drive Diagnostic.

❑ DSPEED

Materials Required

Apple 5.25-Inch Disk Drive Diagnostic diskette
Disk Drives Technical Procedures manual
A small (jeweler's) flatblade screwdriver
Apple III with video display
The Disk III to be adjusted

Making the Adjustment

To adjust the DSPEED (drive motor speed):

1. Remove the case and shield.

2. Start the diagnostic running (see the *Disk Drives Technical Procedures*, Section 1, 5.25-Inch Disk Drive Diagnostic). The diagnostic should be placed in the external drive after it has been loaded from the internal drive.

3. Look at the back of the drive mechanism. Locate the motor control card, mounted on the rear, and locate the potentiometer which has a screwdriver adjustment on the side (Figure 1, #1). (Do not confuse this with the potentiometer(s) on the analog card!)

   Note: When you make the DSPEED adjustment, keep the disk drive flat.

4. The adjustment is extremely sensitive, so turn the adjustment screw very slowly. The drive motor speed indicator on the screen will move back and forth, showing changes of the speed.

5. Adjust the speed so that it stays within the "good" range, as close to 0 as possible. Let the test run for 30 seconds.

6. Press <Escape> to return to the main menu; then repeat the test.

   Does the DSPEED now stay within the "good" range?

   - Yes—Press <Escape> to return to the main menu.

   - No—If the DSPEED cannot be properly adjusted, return the faulty mechanical assembly to Apple.

7. Remove the Diagnostic diskette from the drive.

8. Replace the shield and case.

❑ WRITE-PROTECT SWITCH

Materials Required

Scratch diskette
Small flatblade screwdriver

Making the Adjustment

To adjust the write-protect switch:

1. Remove the case.

2. Start the diagnostic running (see the *Disk Drives Technical Procedures*, Section 1, 5.25-Inch Disk Drive Diagnostic), and run the "Write Protect" test.

3. Note the two setscrews holding the write-protect switch in place (Figure 2, #1 & 2). The switch is located on the front left side of the drive as you face the drive door. The far setscrew (Figure 2, #1) forms a pivot for the switch; the near setscrew (Figure 2, #2) sets the switch position.

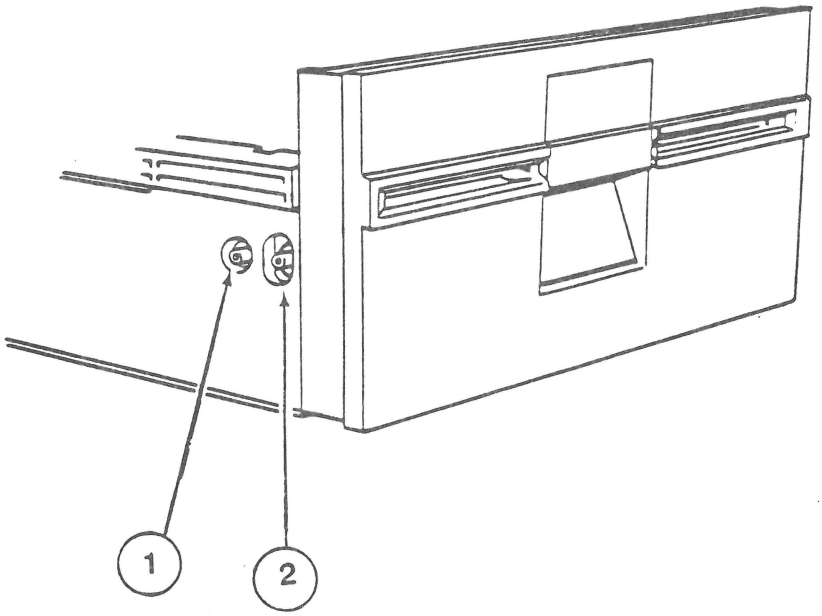

FIGURE 2

4. Insert the scratch diskette all the way and leave the disk drive door open.

5. Loosen the rear setscrew. Then loosen the front setscrew (Figure 2, #2), raise up on it until the switch disables, and tighten the setscrew.

6. Tighten the rear setscrew (Figure 2, #1).

7. Check the adjustment again by withdrawing the diskette approximately one-inch. The switch should be enabled.

   Note: If the switch continues to show a disabled condition, reboot and try the procedure again.

8. Verify the adjustment again by pushing the diskette fully into the disk drive and then withdrawing it approximately one inch. The condition should change from disabled to enabled.

Apple Technical Procedures

Disk III

Section 4 – Preventive Maintenance

❑ CONTENTS

4.2	Introduction
4.2	Read/Write Head
4.3	Head Load Button
4.3	Motor Drive Belt

Note: If a step is underlined, detailed instructions for that step can be found in Section 1, Take-Apart.

❑ INTRODUCTION

The read/write head should be cleaned any time the computer or disk drive is being serviced. The head load button should be replaced whenever it is worn or dirty. The drive motor belt should be inspected any time the disk drive is being serviced.

❑ READ/WRITE HEAD

Materials Requried

#2 Phillips screwdriver
Cotton swabs
Isopropyl Alcohol (80% alcohol/20% water)

Procedure

To check the read/write head:

1. Remove the case, shield, and analog card.
2. Clean the guide rails with the isopropyl alcohol. **Do not** use grease.
3. Inspect the head for worn or dull spots in the ceramic. If you find any, replace the mechanical assembly.
4. Clean the head with the isopropyl alcohol.
5. Move the read/write head assembly back and fourth along the full length of its travel. Check for any blockage or friction. If there is any, replace the mechanical assembly.
6. Replace the analog card, shield, and case.

❑ HEAD LOAD BUTTON

Materials Required

#2 Phillips screwdriver
Needlenose pliers
Head load button

Procedure

To service the head load button:

1. Remove the case, the analog card, and the mechanical assembly.

2. Lift up the Head Load Arm. If the head load button is worn or dirty, squeeze the top part of the load button with thin needlenose pliers, and drop the button down.

   Note: Some head load buttons are glued. If the glue cannot be broken, send the mechanical assembly to Apple for servicing.

3. Install a new load button by inserting it into the holder and pushing up until it snaps into place.

❑ MOTOR DRIVE BELT

Materials Required

#2 Phillips screwdriver
Motor drive belt

Procedure

1. Remove the case.

2. Turn the drive upside down. Locate the motor drive belt and check it for cracks, slippage, and elasticity. If the belt is dry or cracked, or if it slips, continue with step 3.

3. Slip the belt off the pulley.

4. Place the belt around the motor spindle and then slip it around the pulley.

5. Replace the case.

Apple Technical Procedures

Disk III

Section 5 – Illustrated Parts List

❑ CONTENTS

5.3 Complete Assembly (Figure 1)
5.5 Internal Parts (Figure 2)
5.7 Analog Card (Figure 3)

The figures and lists in this section include all piece parts that can be purchased separately from Apple for the Disk III, along with their part numbers. These are the only parts available from Apple. Refer to your *Apple Service Programs Manual* for prices.

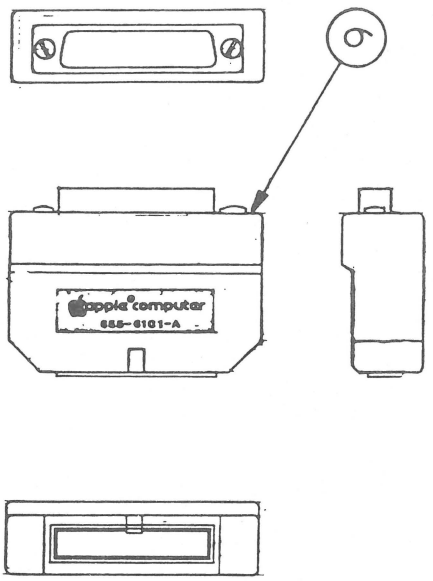

FIGURE 1

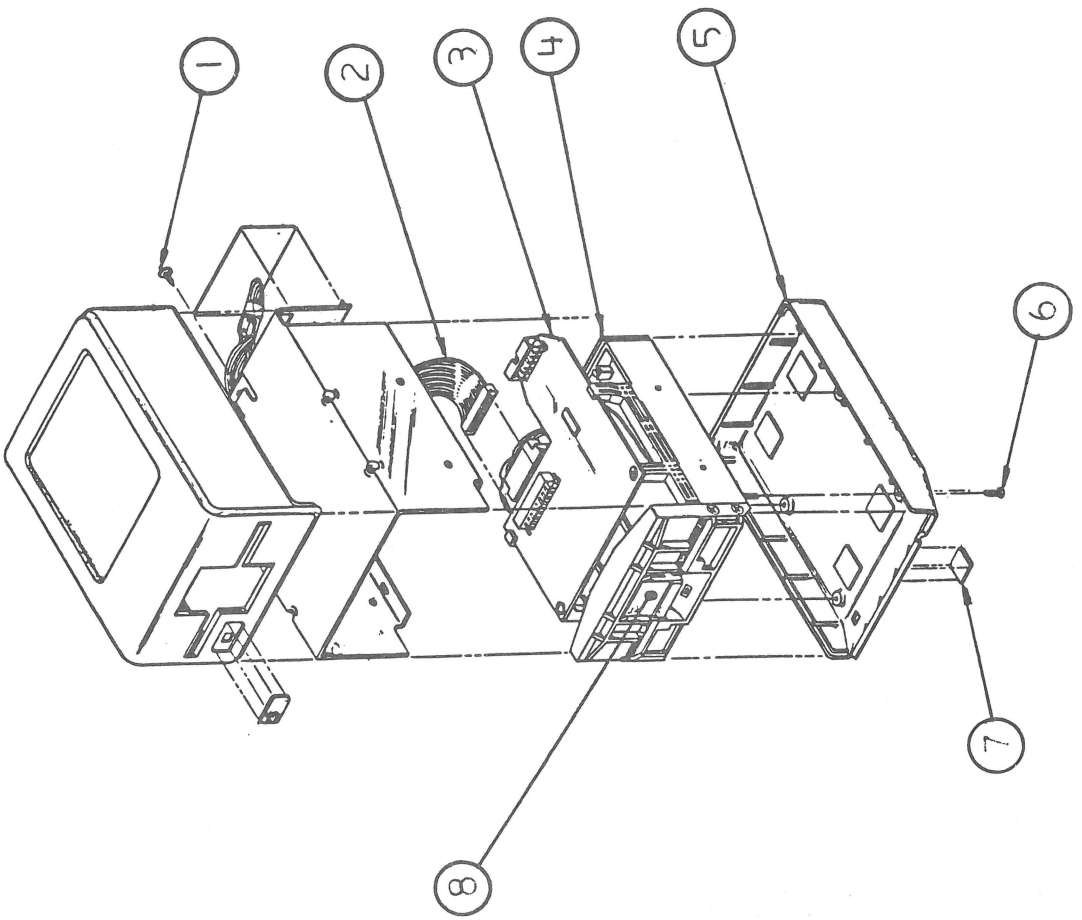

❑ DISK III – COMPLETE ASSEMBLY (Figure 1)

Item	Part No.	Description
1	430-1001	Screw, Tapping, 8 x 18.437, Disk III
2	590-0024	Disk III Cable
3	661-92002	Disk III Analog Card
4	661-92015	Disk III Mechanical Assembly, External
5	815-0186	Disk III Bottom Cover
6	400-1606	Screw, 6-32 x 3/8, Disk III
7	865-0001	Rubber Foot
8	815-0187	Disk III Door
9	655-6101	PCB Adapter Assembly, Disk III/Apple III Plus

FIGURE 2

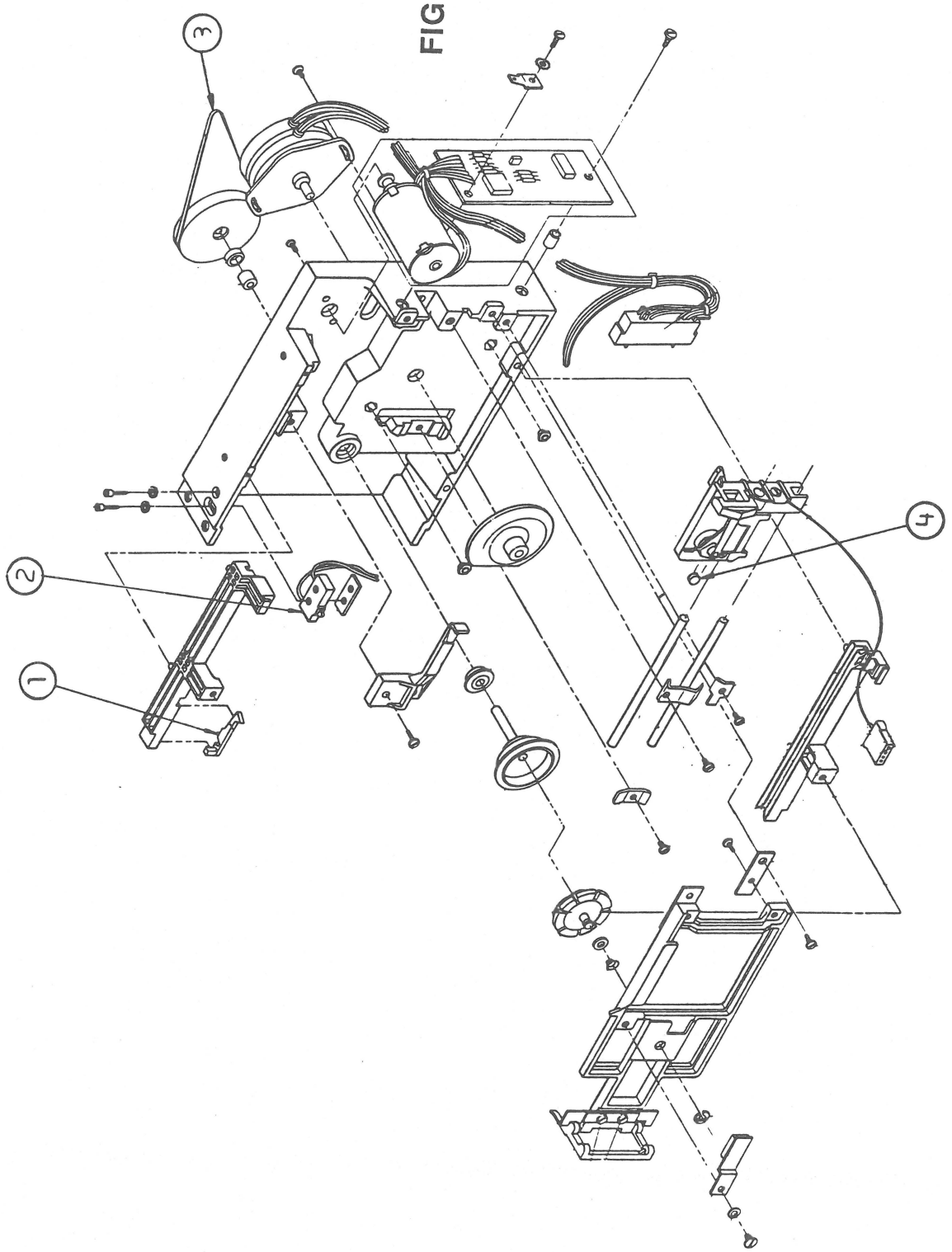

❑ DISK III – INTERNAL PARTS (Figure 2)

Item	Part No.	Description
1	815-0377	Write Protect Actuator (Alps)
	U815-0073	Write Protect Actuator (Shugart)
2	U705-0005	Write Protect Switch, Disk II/III
3	U880-0002	Disk Drive Belt
4	U815-0064	Load Button

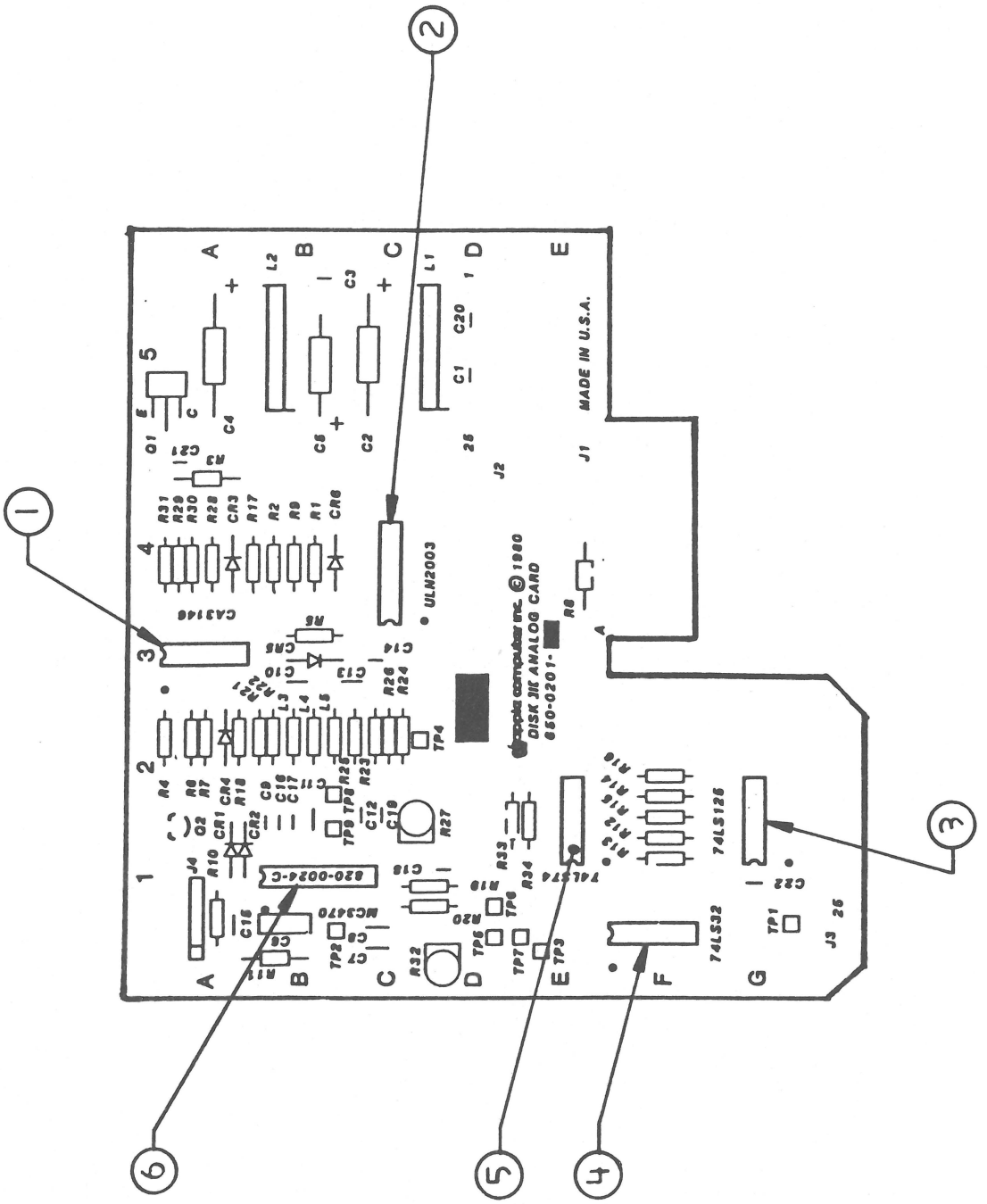
1
2
3
4
5
6
MADE IN U.S.A.
ULN2003
DISK III ANALOG CARD
820-0024-C
74LS174
74LS126
74LS32

❑ DISK III - ANALOG CARD (Figure 3)

Item	Part No.	Description
1	351-3146	IC 3146
2	327-2003	IC 2003A
3	306-0125	IC 74LS125
4	305-0032	IC 74LS32
5	305-0074	IC 74LS74
6	355-3470	IC MC3470

PROFILE TECHNICAL PROCEDURES

TABLE OF CONTENTS

Section 1 - Apple IIe ProFile Limited Data Recovery Program, Version 2.0

Introduction.....1.3
What You Should Do First.....1.3
Software Overview.....1.3
Equipment Required.....1.4
Setting Up the System.....1.4
Running the Program.....1.5
Interpreting the Results.....1.8

Section 2 - ProFile Troubleshooting and Exchange Procedures

Introduction.....2.2
Troubleshooting
  Materials Required.....2.3
  Using the Troubleshooting Flowchart.....2.4
  Troubleshooting Flowchart.....2.5
  ProFile Functional Test.....2.6
Exchanging the ProFile
  Materials Required.....2.7
  Unpacking the Exchange Module.....2.7
  Removing the Cover.....2.9
  Replacing the Cover and Rear Plates.....2.9
Summary of Procedures (Checklist).....2.10

©Apple Computer, Inc., 1985, 1986
No part of this document may be reproduced in any form without the written permission of Apple Computer, Inc.

Macintosh is a trademark of McIntosh Laboratory, Inc., and is used by Apple Computer, Inc., with its express permission. ProFile is a trademark of Apple Computer, Inc. ProDOS, Lisa, Apple and the Apple logo are registered trademarks of Apple Computer, Inc.

Section 3 - Illustrated Parts Lists

Cables.....3.3
Piece Parts.....3.5
Miscellaneous Parts.....3.7
Packaging.....3.9

Appendix - A

ProFile Packaging for Shipment.....A.1

ProFile Technical Procedures

Section 1

Apple IIe ProFile Limited Data Recovery Program, Version 2.0

Contents:

Introduction.....1.3
What You Should Do First.....1.3
Software Overview.....1.3
Equipment Required.....1.4
Setting Up the System.....1.4
Running the Program.....1.5
Interpreting the Results.....1.8

A. INTRODUCTION

The ProFile 5/10 Limited Data Recovery Program runs on a 128K Apple IIe system and can be used to recover data stored on a ProFile that has been used with any computer from the Apple II or Apple /// families. It works with DOS and ProDOS based file structures and therefore, will not recover or recognize MacWorks or Lisa based ProFiles. The recovery program attempts to copy customer's files from a damaged ProFile to the exchange unit. Although there is no guarantee that data can be transferred, in most cases data recovery is possible if the ProFile passes the self test after being turned on.

NOTE: Data can only be transferred to a Profile with a storage capacity as great or greater than the damaged Profile. (You cannot, for example, transfer data from a 10 megabyte damaged Profile to a 5 megabyte good Profile -- there would not be enough room for all the data.)

If the ProFile READY light does not come on to a steady state within 24 hours, data cannot be recovered using this program. Special arrangements must then be made with Level 2 for data recovery.

The importance of regular backups should be emphasized to the customer.

B. WHAT YOU SHOULD DO FIRST

First, make a back-up copy of the Recovery Program diskette! You will be using a system with known bad hardware attached to it, so don't take the chance of destroying the software accidentally. You may make a copy of the program using the COPYA program on the DOS System Master diskette, or the ProDOS Filer, Volume Copy. Put the original away in a safe place.

C. SOFTWARE OVERVIEW

The program is designed to recover a large portion of data found on a damaged ProFile. In order to use this program the customer's ProFile must complete the power-up cycle, which includes a testing sequence. That is, the red "READY" indicator must be on and steady. If this does not occur, data recovery is not possible. (If the source/bad ProFile has difficulty completing the power-up cycle, leave it on for 24 hours. If left on long enough, most ProFiles warm up enough to complete the cycle.)

The program copies data from the customer's ProFile to the exchange unit. If the program has difficulty writing to the Exchange ProFile, it should stop. Something could be wrong with the Exchange unit, so try another Exchange unit. The program verifies the integrity of the destination (Exchange) ProFile, does a direct block transfer from source (bad) to destination (good), then manipulates the destination data to rebuild file and directory structures. The program does not modify the source (bad) ProFile in any way.

As the program proceeds, those blocks which the program has problems reading are identified. At the conclusion of the data transfer, the program examines each file to see if any of its blocks were among those which couldn't be copied. A printed record indicates the uncopied files as being suspect and, most probably, unusable. While this is going on, the master allocation map for the entire ProFile is also being rebuilt. The allocation map tells which blocks are used and which are free for use.

Our testing has shown that the program is able to recover most of the data from those ProFiles that become "READY".

D. EQUIPMENT REQUIRED

Apple IIe System (128k)
Monitor
Compatible Printer (optional)
Printer Interface Card installed in slot 1 (optional)
ProFile Interface Card (2 required)
ProFile Interface Cable (2 required)

E. SETTING UP THE SYSTEM

1. Turn the power off on the Apple IIe and remove the cover.

2. If you wish a printout of the results, install a correctly configured interface card for the desired printer in slot 1.

3. Configure the Apple IIe with two ProFiles as follows: Install the ProFile interface cards in any two slots other than slots 3 or 6. Seat the cards firmly in the slots.

4. Connect ProFile cables from the ProFiles to the ProFile interface cards. If setting up a printer, use the printer cable to connect the printer to the printer interface card.

5. Connect the monitor, ProFiles, and printer (if used) to the power source.

F. RUNNING THE PROGRAM

1. Turn on the monitor.

2. If using a printer, turn it on and make sure it is on-line.

3. Place the Recovery Program Diskette in the Apple IIe disk drive.

4. Turn on the Apple IIe and the program will start.

5. Turn on both ProFiles.

6. **Wait** until the "READY" lights on both ProFiles show steady red. This usually takes only a minute or so, but can take up to 24 hours for a bad ProFile. If the source/bad ProFile has some difficulty completing the power-up cycle and testing sequence, leave the ProFile on at least 24 hours, if at all possible. (If left on long enough, ProFiles sometimes warm up enough to complete the cycle.)

7. **NOTE:** The program has help screens throughout. To access them, hold down the **OPEN-APPLE** key while typing **?** (remember to shift for the **?**). These screens clarify what the program is requesting. Use them if you become confused while running the program. The steps which follow will make no reference to the help screens.

8. When the program starts you will see the Title Page message below:

This program will attempt to recover data from a 5 or 10 megabyte hard disk and save the data to another 5 or 10 megabyte hard disk.

Before running this program you must have a source (bad) and destination (good) drive connected and turned on.

9. Check to see that you have connected the ProFiles and that they are in the READY state.

   Press <RETURN>. The screen now displays the following message:

If you have a printer connected in slot 1, the program can make hard copies of the names of files transferred and results of the data recovery.

If you wish a printed report, make sure that the printer is connected, turned on, and correctly configured or the program will not continue.

Do you want a printed report (Y/N)?

10. This message indicates that if are going to respond to this prompt with Y (you wish a printed report), the printer must be correctly configured and on-line, or the program will hang when it attempts to send information to the printer.

    Respond to the prompt with Y or N and press <RETURN>.

    The screen now displays the following information:

The following hard disk drives are attached to this system

__ megabyte hard disk drive in slot __

__ megabyte hard disk drive in slot __

Enter the slot number that corresponds to the source/bad hard disk drive you want to recover data FROM, then press RETURN.

11. Enter the slot number of the bad drive (the one you want to recover information from) and press <RETURN>.

    A verify screen appears showing which are the source and destination hard disk drives and how many megabytes of storage capacity each has. There is a warning that any information on the destination/good drive will be erased by the data that will be transferred to it. You are asked if the good and bad drives are identified correctly.

12. Check to see that the drives are identified correctly. Then, execute one of the following three options.

    Enter Y or Yes if the disk drives are identified correctly. The program will continue.

    Enter N or No if the drives are NOT correct. You can then type in the correct slot numbers.

    Press ESC to restart the program. The program will go to the title page.

    The final verify screen is now displayed. This is your final chance to be sure that the ProFiles are correctly designated.

13. Verify that the ProFiles are correctly designated source/bad and destination/good.

    Type in RECOVER.

    The status screen is now displayed:

This program is recovering data from the source/bad
__ megabyte disk drive connected to slot 5

And copying the recoverable data to the destination good
__ megabyte hard disk drive.

Verifying internal data structures
Processing block number _____ of 19456 total blocks
or, (occasionally):
Rebuilding file number _____

    During the operation of the program, different messages will appear on the screen to let you know what is happening within the program. The recovery procedure will take up to 40 minutes, depending upon how much data can be recovered, and what problems are encountered.

    The Exit screen tells you when the recovery is complete.

14. On completion of the program, messages will be listed to the printer. (You may verify file transfer by rebooting with the ProDOS Filer diskette and listing the files.)

15. Power down both ProFiles. The exchange unit goes to the customer, and the other unit goes to Level 2.

16. Turn the other equipment off, remove the program diskette and put it away in a safe place.

G. INTERPRETING THE RESULTS

Give your customer the printed results of the data recovery procedures and a copy of how to interpret these results. In the following explanation, examples of the printout are shown in bold face printing. These statements are interpreted as follows:

Apple IIe Hard Disk Limited Data Recovery **Version 2.0**
Results:
Trouble accessing **0 blocks** (a number other than 0 might appear)

All accessible directories are listed below. Individual files which contain problem blocks are also listed.

The resolution of the individual files on the ProFile is shown as a running status, displaying the directory names as they appear on the ProFile. If a file contains one or more "suspect" blocks, its name will appear.

These files are not deleted as they may, in fact, still be partially usable. An example of this would be an ASCII file, such as one created by AppleWriter. An attempt should be made by the customer to access these files. If the attempt results in "unusual" things happening, then delete them.

Block Conflict Report

This message appears if two or more files claim use of the same block. Another pass through the ProFile directories is made to resolve it. Along with this message the directory names are listed on the print-out. Those files which conflict with each other will be listed.

An attempt is made to resolve the disputed block address. If the conflict is resolved, no further mention is made of the files. If the program is unable to decide the correct ownership of the block, the following message appears: **Unable to repair all block conflict errors. Try your files.** This indicates that the files have not been copied to the good ProFile. On conclusion of the program, use the ProDOS Filer program to attempt to copy the conflicting files from the bad source ProFile to the good Profile or to a diskette. The address conflict will be resolved in the copy process.

Summary of Allocation Map Changes

This summarizes the changes made to the master allocation map. This will include the total number of blocks available on the ProFile (**blocks on volume**), the number of blocks in use (**blocks used**), and the number still available (**blocks available**).

Block(s) released from allocation map

A statement will also appear regarding the number of blocks, if any, released from the allocation map. If blocks were released, the original allocation map "thought" that more blocks were in use than really were. The ProFile returned to your customer contains the updated, correct allocation map.

ProFile Technical Procedures

Section 2

ProFile Troubleshooting and Exchange Procedures

Contents:

Introduction.....2.2
Troubleshooting
  Materials Required.....2.3
  Using the Troubleshooting Flowchart.....2.4
  Troubleshooting Flowchart.....2.5
  ProFile Functional Test.....2.6
Exchanging the ProFile
  Materials Required.....2.7
  Unpacking the Exchange Module.....2.7
  Removing the Cover.....2.9
  Replacing the Cover and Rear Plates.....2.9
Summary of Procedures (Checklist).....2.10

Refer to the Lisa/Macintosh XL Technical Procedures for repairing ProFiles used with a Lisa®/Macintosh™ XL computer.

INTRODUCTION

When a customer returns a ProFile™ 5 or 10 megabyte hard disk drive for servicing, the unit will need to be exchanged **if the ProFile itself is defective.** However, there are two other possible causes of ProFile problems: 1) bad interface cards or cables, or 2) a sudden bump or power outage to the ProFile while data was being read or written. The troubleshooting procedures in this section will allow you to check for these problems and to perform a functional test to determine whether the ProFile itself is defective or not.

If the customer wishes to try to recover data from the old ProFile, run the Limited Data Recovery program (described in **Section 1**) and record the data onto your exchange unit. If data recovery is successful, the ProFile itself is probably not defective: the problem was probably caused by a bump or a power outage during data access.

If the troubleshooting procedures show that the ProFile is defective, turn to the exchange procedures included in this section. If the ProFile is not defective give it back to the customer (after restoring the recovered data).

TROUBLESHOOTING

Materials Required

FOR APPLE II OR IIe

Known Good	Customer's
Apple II or IIe	ProFile Interface Card
ProFile Interface Card	Interface Cable
Interface Cable	ProFile
ProFile	
ProDOS User's Diskette	

Refer to **Apple IIe Service Notes** for important information about the Interface Card.

FOR APPLE /// OR /// PLUS

Known Good	Customer's
Apple /// or /// Plus	ProFile Interface Card
ProFile Interface Card	Interface Cable
Interface Cable	ProFile
ProFile	
System Utilities diskette	

Refer to **Apple /// Troubleshooting** for important information about the Interface Card.

Using the Troubleshooting Flowchart

CAUTION: Always wait until the ready light on the ProFile is steady before turning the ProFile off. Always turn off the computer and the ProFile before exchanging any item.

The Troubleshooting Flowchart is used to determine if the ProFile is the defective item.

The flowchart consists of rectangles and diamonds. The rectangles contain instructions to be followed. The diamonds contain questions which must be answered to determine the path by which to leave them. Always follow the flowchart through to the end to check the system completely.

If a rectangle contains more than one instruction, follow the first instruction and then leave the rectangle to continue through the flowchart. If the first instruction does not fix the problem, the chart will return you to the rectangle so that you can follow the second instruction, and so on.

IMPORTANT: If replacing an item does not solve the problem, make sure you put the original item back in place before replacing the next item recommended.

Here's What to Do:

1. Set up the appropriate **KNOWN GOOD** computer. Do not turn on the computer.

2. Connect the customer's ProFile. Use the customer's ProFile Interface Card and Interface Cable. Be sure all cable connections are secure.

3. Go to the **Troubleshooting Flowchart.** Start with the rectangle **Power on the ProFile.**

   The ProFile will take 1 to 6 minutes to come up to the ready state. The ready state is identified by the LED being on steadily, with no flashing.

4. Follow the flowchart through to the end.

TROUBLESHOOTING FLOWCHART

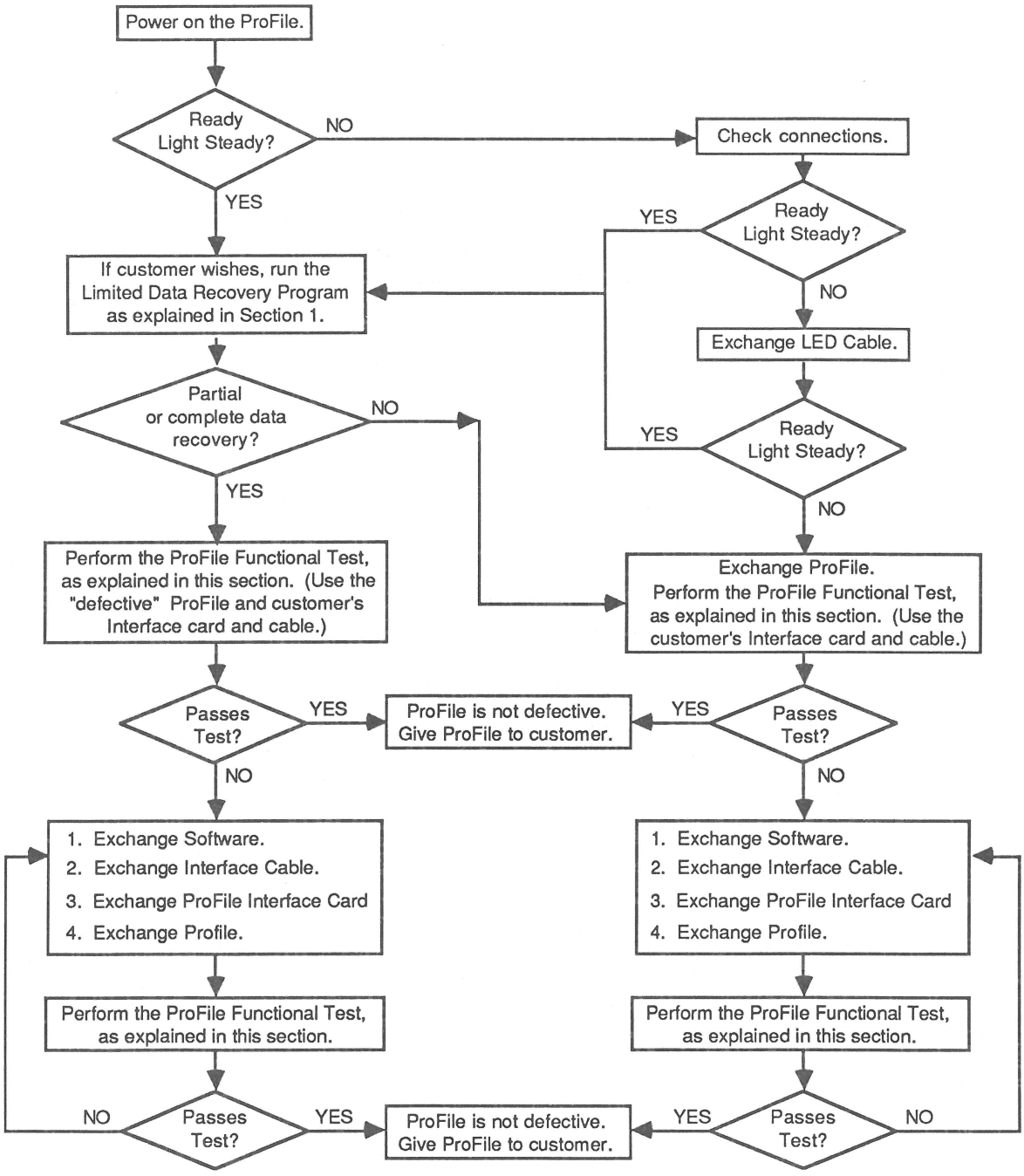

ProFile Functional Test

This procedure allows you to determine whether the customer's ProFile is really defective or not.

IMPORTANT: A ProFile contains 32 blocks which are **NOT ALLOCATED** (or accessed) unless a data block is bad. If a data block is bad, the ProFile writes to one of these normally inaccessible blocks. If the functional test shows that the ProFile has 21 bad blocks or fewer, the ProFile is considered functional and should not be returned for exchange.

1. In this test, use the customer's interface card and cable if possible. Otherwise use a known-good interface card and cable.

   Using the ProDOS User's Diskette (IIe) or System Utilities diskette (///):

   a. Reformat the customer's ProFile.

   b. Verify the volume two or three times. **No more than 21 Bad Blocks** should be displayed each time. (Verification of the ProFile takes approximately 4 to 8 minutes.)

   c. Write and read to the ProFile to verify that it is functioning correctly.

2. If you were able to complete all of step 1 successfully on the customer's ProFile, copy the customer's files from the exchange ProFile back onto the customer's ProFile and return the exchange ProFile to your service stock. Give the customer his ProFile.

   OR

   If the customer's ProFile does not meet the specified criterion in step 1b, give the customer the exchange ProFile, with his recovered data, and perform step 1b **ONLY** to check the exchange ProFile. **DO NOT REFORMAT.**

EXCHANGING THE PROFILE

Materials Required

Medium Phillips screwdriver
Protective pad

Unpacking the Exchange Module

1. Carefully remove the exchange module from its packaging.

2. A ProFile cover marked "SHIPPING FIXTURE" is attached to the spares kit ProFile. Remove this cover from the ProFile.

3. Verify that all modules are present, all connections are proper, and that there are no loose or broken wires or foreign materials.

4. Keep the cover and shipping materials for use later.

CAUTION: The ProFile is a mechanical device with motors and moving parts. Rough handling -- such as dropping the drive, sharply jarring it, or allowing heavy objects to fall on it -- can cause a malfunction. Whenever it is necessary to turn the ProFile over, be sure to rest it on a protective pad.

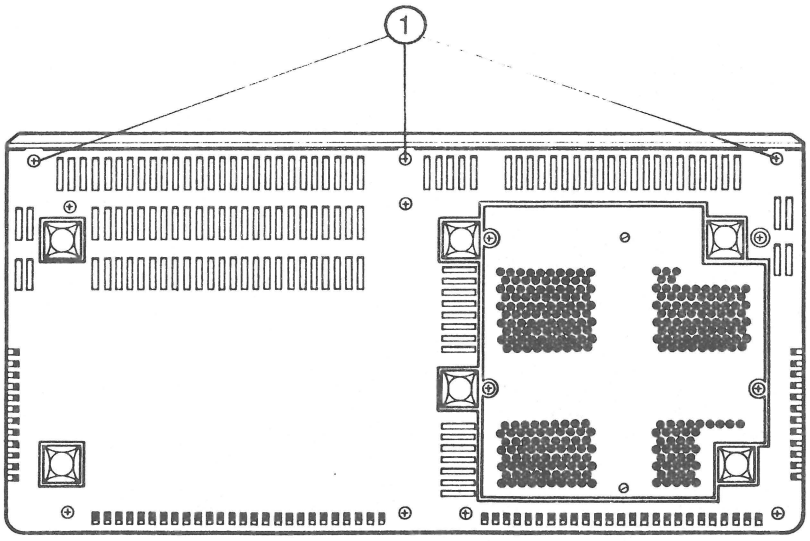

FIGURE 1

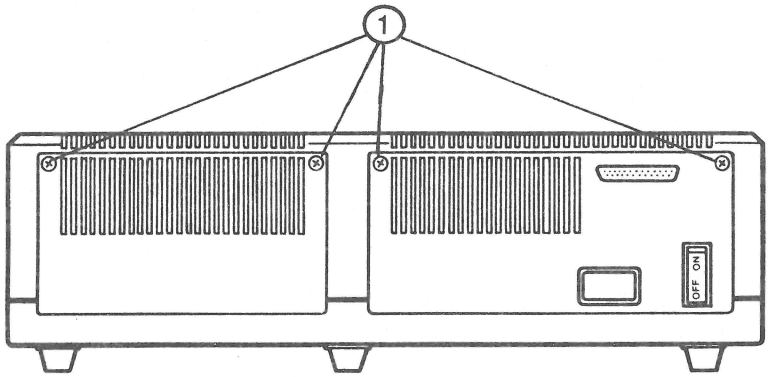

FIGURE 2

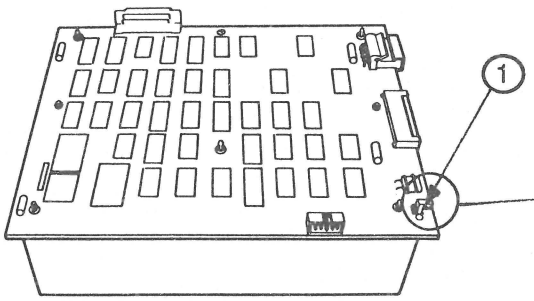

FIGURE 3

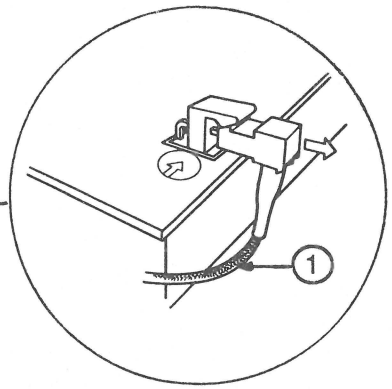

FIGURE 4

Removing the Cover

1. Be sure the customer's ProFile is turned off. Disconnect the power cord and ribbon cable from the rear of the ProFile.

2. Turn the ProFile over, lay it on the protective pad, and remove the three Phillips-head screws from under the front panel (Figure 1, #1).

3. Turn the ProFile right side up; remove the four screws from the two plates on its back (Figure 2, #1).

4. Lift the cover off carefully and rest it on the far side of the case, taking care not to pull on the LED cable.

5. Unplug the LED cable from its socket on the controller board (Figures 3 and 4, #1).

Replacing the Cover and Rear Plates

1. Attach the customer's LED cable to its connector on the controller card of the exchange unit (Figure 3, #1). Make sure the LED cable exits down and away from the card (Figure 4, #1).

2. Attach the customer's two rear plates to the exchange unit using the four screws. Do not tighten the screws at this time (Figure 2, #1). **NOTE:** The serial number is stamped on one of the rear plates and must be transferred to the ProFile which the customer will keep.

3. Place the customer's ProFile cover onto the exchange module. (Hint: The four slots on the back of the cover fit between the inner and outer rear plates. Line up the back first; then pull the cover gently forward and down. Check around the cover to make sure the LED cable isn't caught between the cover and the base.)

4. Tighten the four rear-plate screws.

5. Turn the ProFile over and replace the three screws on the bottom front edge (Figure 1, #1).

6. Turn the ProFile right side up. Reinstall the power cord and ribbon cable.

7. Attach the ProFile cover marked "SHIPPING FIXTURE" to the unit to be returned for servicing.

SUMMARY OF PROCEDURES (CHECKLIST)

When a customer brings in a non-working ProFile, follow the steps outlined below.

Run the Limited Data Recovery program with an Apple IIe:

___ Turn on monitor and printer; be sure printer is on-line.

___ Connect exchange ProFile (use slot 3 for the known good Interface card).

___ Connect customer's ProFile (use slot 4 for the known good Interface card).

___ Turn on Apple IIe and run the Limited Data Recovery program (see Section 1 under this tab).

___ Power down and disconnect both ProFiles.

___ Check whether the customer's ProFile is defective by performing the ProFile Functional Test procedures. If the customer's ProFle is not defective, return to the customer or service stock.

If the customer's ProFile is defective, replace with the exchange ProFile.

___ Remove both rear plates from the customer's ProFile.

___ Remove the cover from the customer's ProFile.

___ Unplug the LED cables from the controller cards of both ProFiles. Attach the customer's LED cable to the appropriate connector on the controller card of the exchange ProFile.

___ Transfer the two rear plates from the customer's ProFile onto the exchange ProFile. Note that the serial number is on one of these plates.

___ Attach the customer's cover to the exchange ProFile, fitting it into place over the two rear plates.

___ Transfer the ProFile cover marked "SHIPPING FIXTURE" onto the unit to be repaired.

___ Pack the repair unit in one of the approved packagings (see **Appendix A**).

___ Complete all shipping documentation.

ProFile Technical Procedures

Section 3

Illustrated Parts List

The figures and lists below include all piece parts that can be purchased separately from Apple for the ProFile, along with their part numbers. These are the only parts available from Apple. Refer to your Apple Service Programs manual for prices.

NOTE: For ProFile interface cards for Apple II/II+, Apple IIe and Apple ///, see parts list section for appropriate computer.

Contents:

Cables.....3.3
Piece Parts.....3.5
Miscellaneous Parts.....3.7
Packaging.....3.9

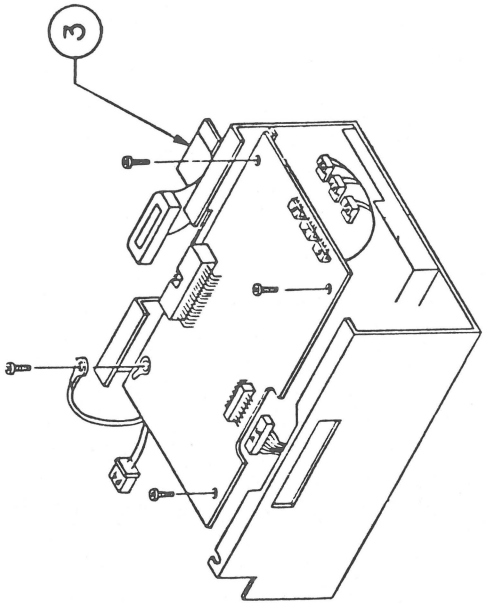

FIGURE 1

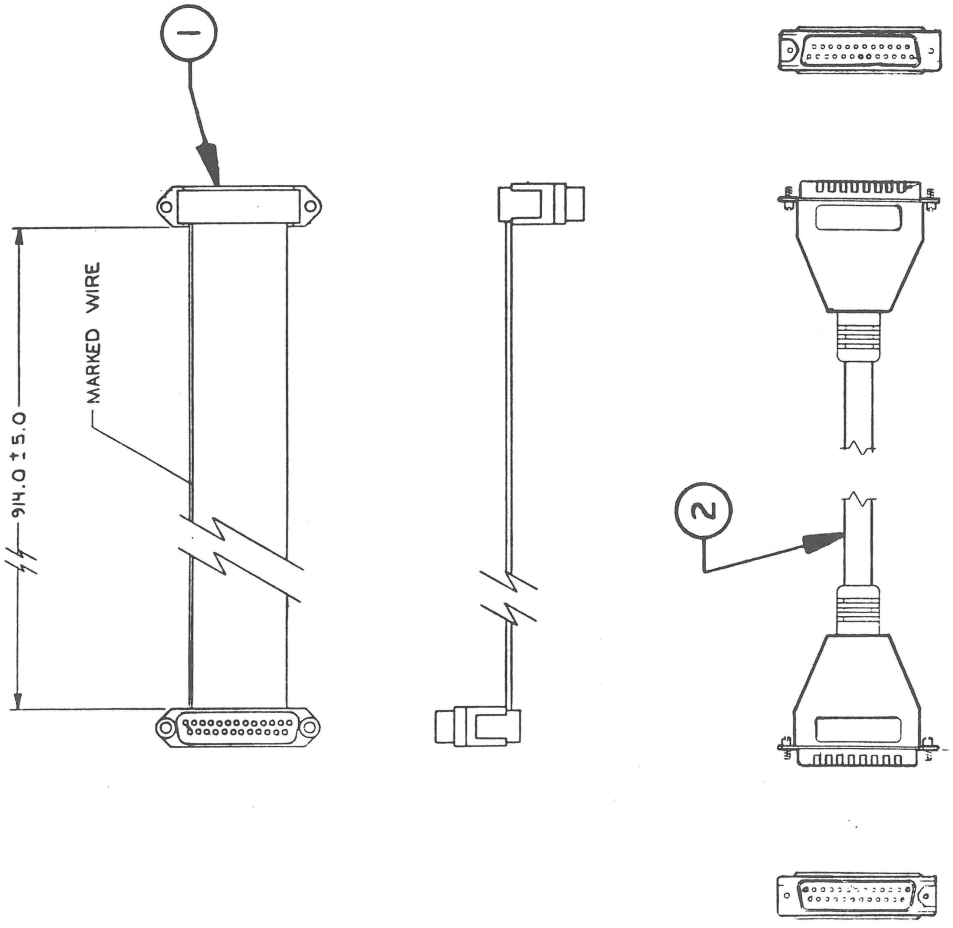

PROFILE - CABLES (Figure 1)

Item	Part No.	Description
1	590-0046	Cable I/O
2	590-0202	Cable, External
3	590-0048	Cable, Controller to Analog

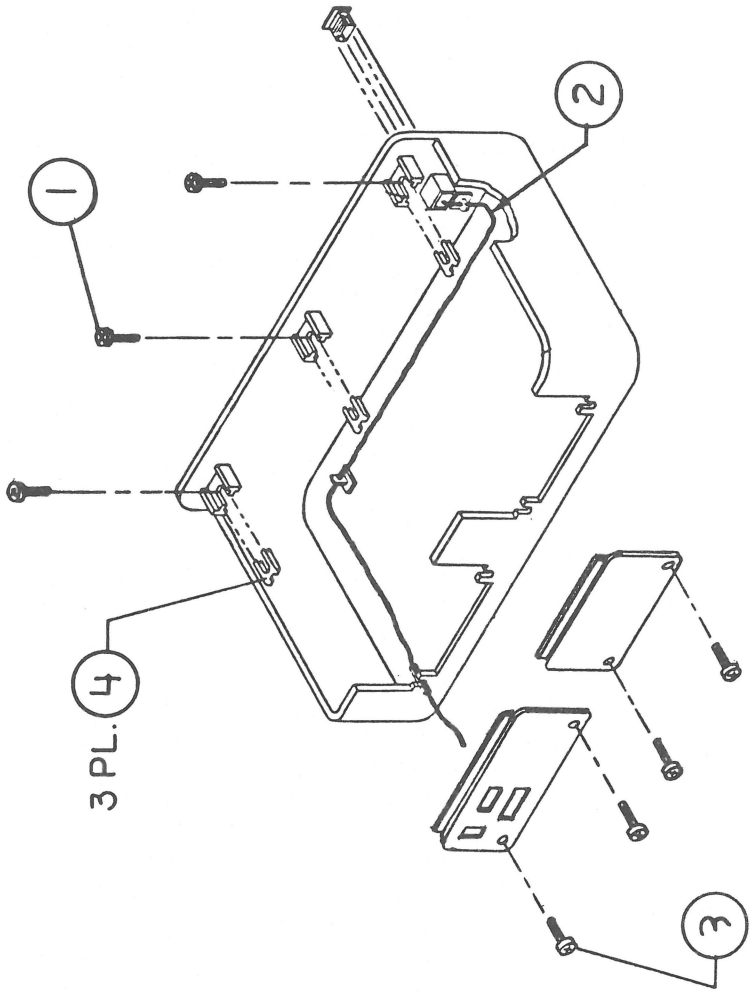

FIGURE 2

PROFILE - PIECE PARTS (Figure 2)

Item	Part No.	Description
1	430-1001	Screw, Tapping, 8-18 x 0.437 PN CRS
2	590-0047	Cable LED
3	403-1606	Screw, 6-32 x 3/8 Panhead
4	835-0005	Nut Speed "J"

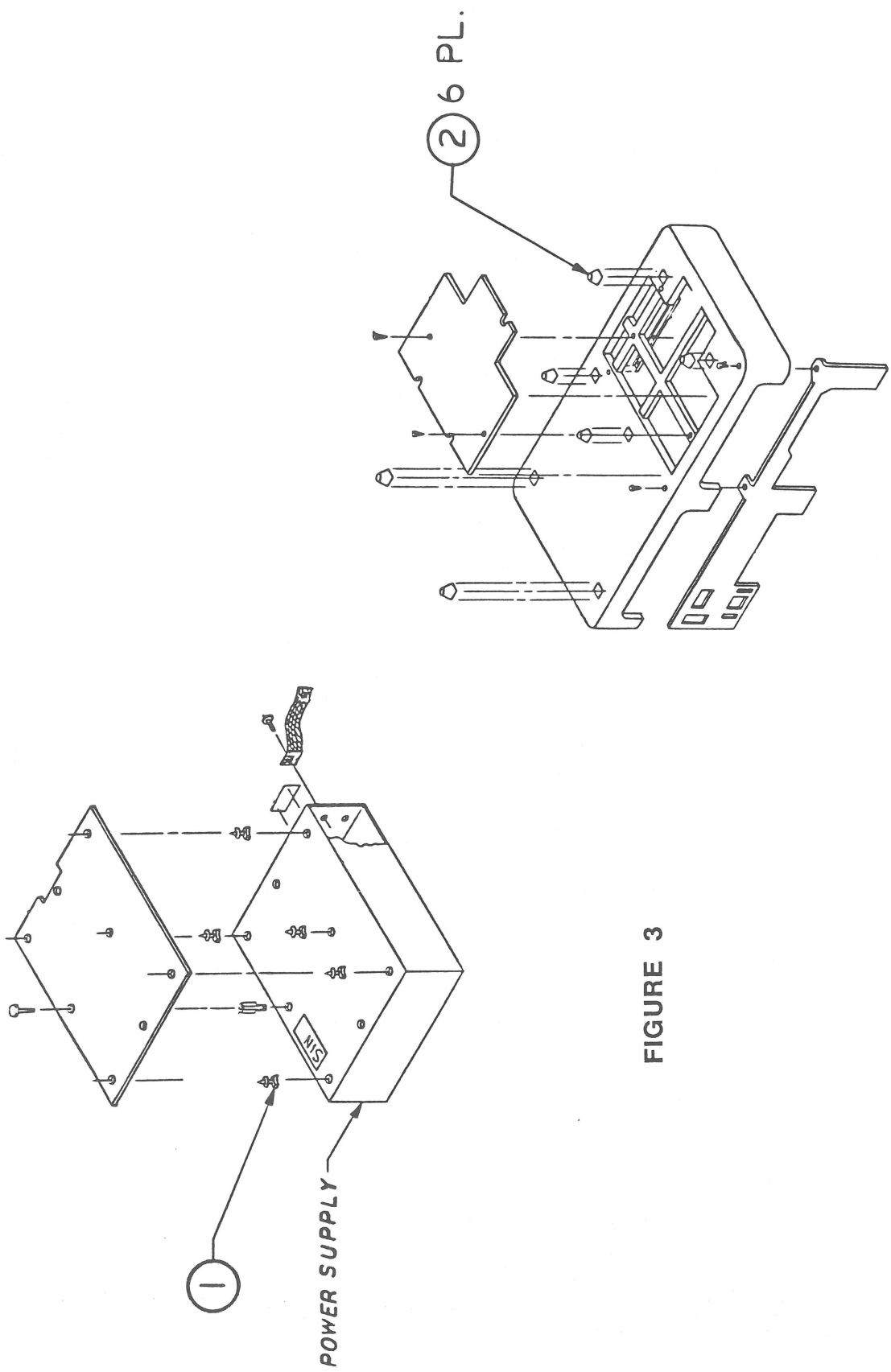

FIGURE 3

PROFILE - MISCELLANEOUS PARTS (Figure 3)

Item	Part No.	Description
1	860-0200	Standoff Plastic
2	865-0005	Foot, .52HT SQ

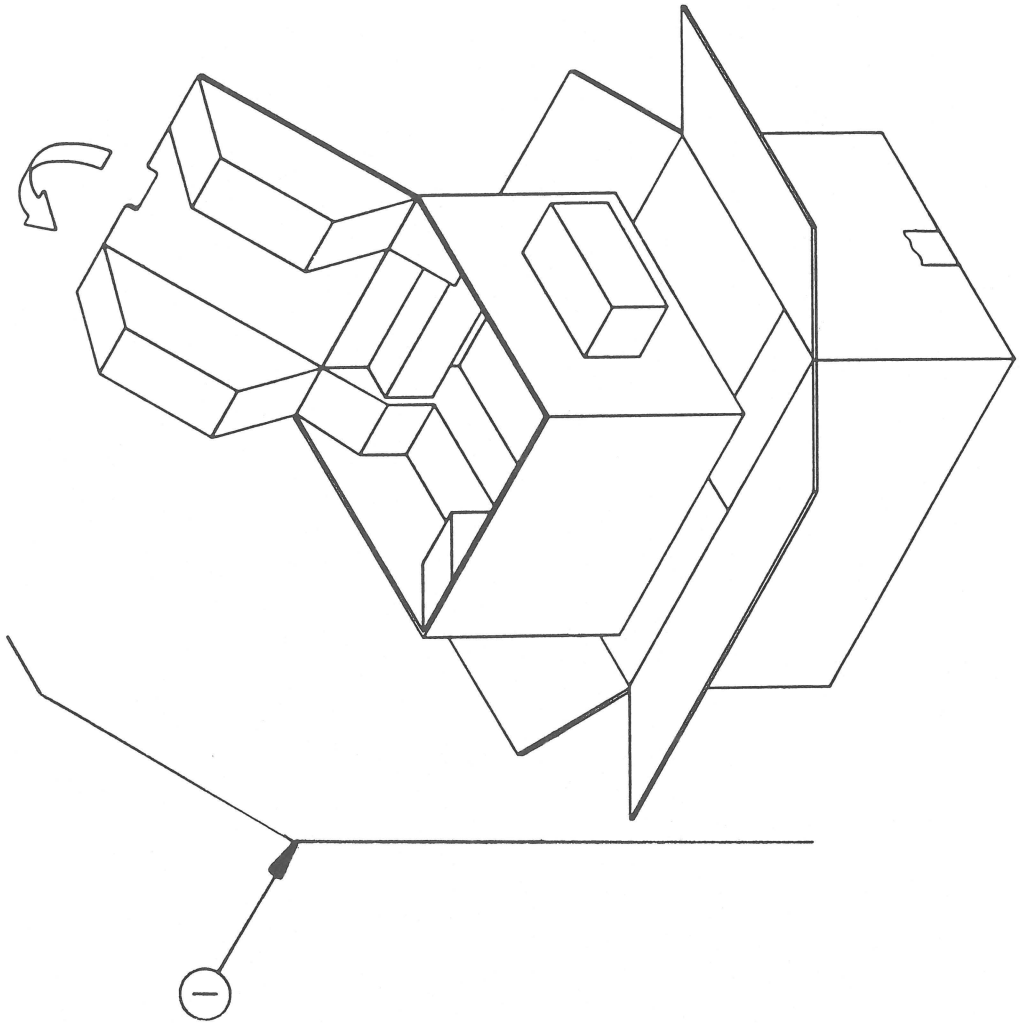

FIGURE 4

PROFILE - PACKAGING (Figure 4)

Item	Part No.	Description
1	602-0129	ProFile Packaging

ProFile Technical Procedures

Appendix A

ProFile Packaging for Shipment

PACKAGING FOR SHIPMENT

There are two different Apple-approved shipping packages available for the ProFile. When returning a ProFile, one of the approved packages must be used.

New Style

The new packaging is smaller and easier to use (see Figure 1).

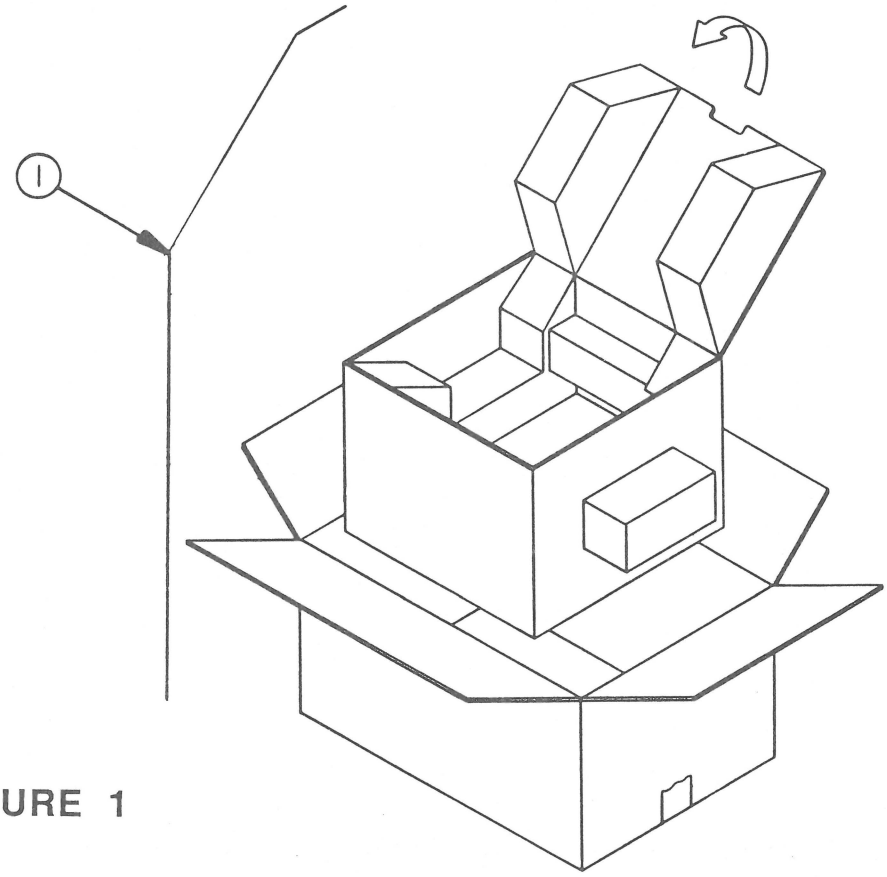

FIGURE 1

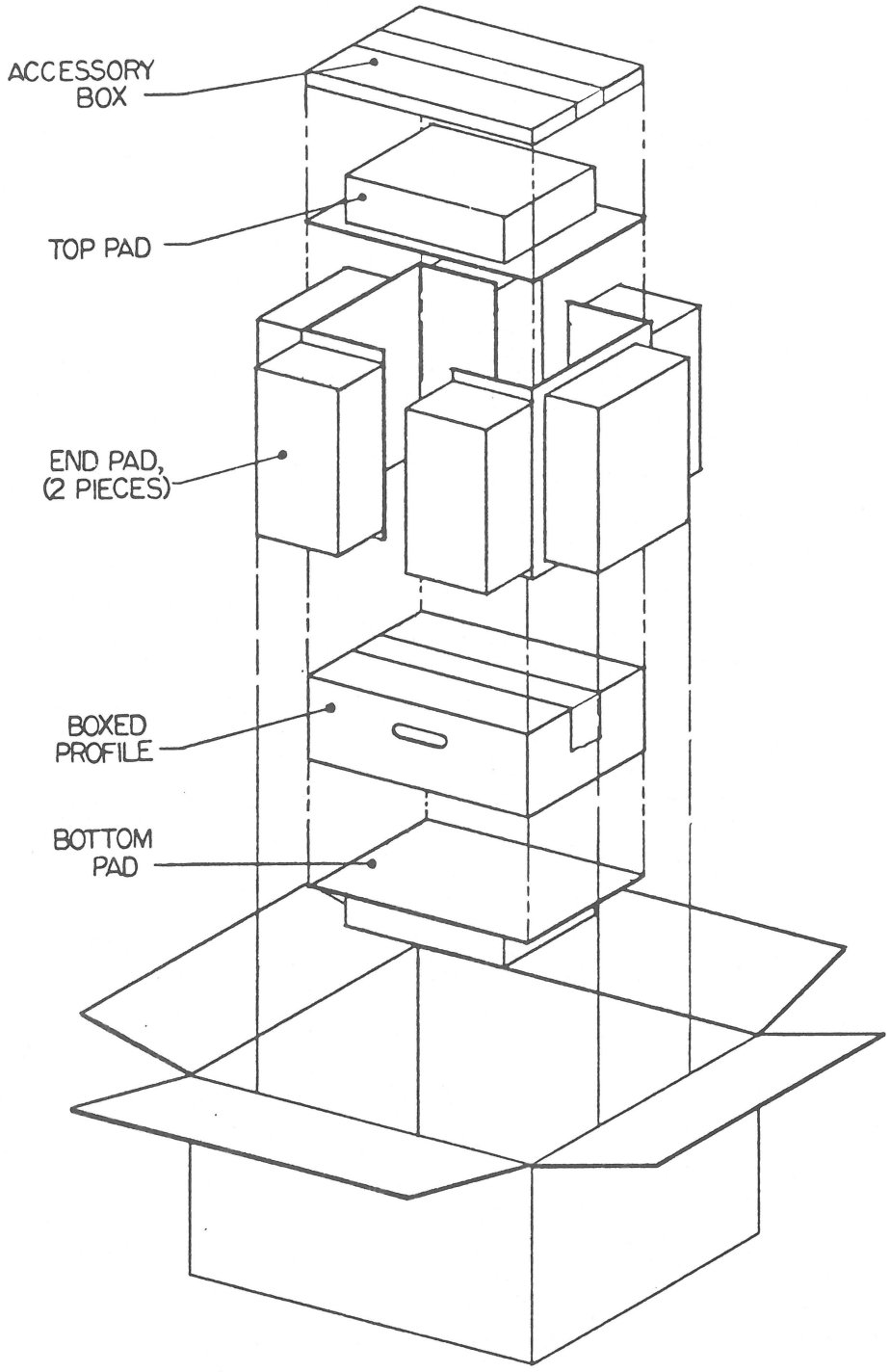
ACCESSORY BOX
TOP PAD
END PAD, (2 PIECES)
BOXED PROFILE
BOTTOM PAD

FIGURE 2

Old Style

The following instructions refer to Figure 2 unless otherwise stated.

1. Set the packing box on the floor with the flaps facing out.

2. Bend the two end pads (foam side out) and slide them into the box.

3. Slide the bottom pad (foam side down) into the box between the end pads.

4. (For this step only, refer to Figure 3.) Place the end caps snugly onto the ends of the ProFile and place the ProFile into its own small box.

5. Place the boxed ProFile snugly between the end pads and slide it down so that it rests on top of the bottom pad.

6. Lay the top pad (foam side up) on top of the ProFile.

7. Place the accessory box on top of the top pad.

8. Close the short end flaps of the packing box; then close the side flaps.

9. Secure the flaps with shipping tape.

10. Secure shipping documentation to the top of the box.

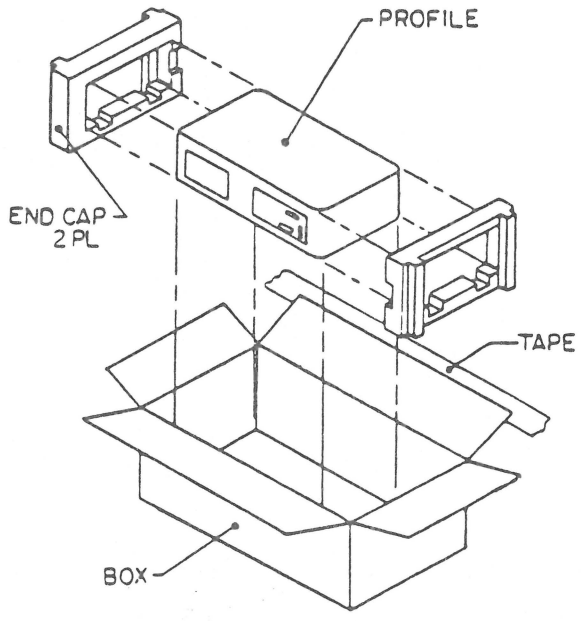

FIGURE 3

Apple Technical Procedures

DuoDisk

Technical Procedures

❑ TABLE OF CONTENTS

Section 1 – Basics	1.2	Product Description
	1.2	Model Comparison
	1.2	Connecting the Drives
Section 2 – Take-Apart	2.2	Introduction – Interchangeable Parts
	2.3	Cover and Shield
	2.4	Analog Board
	2.6	Mechanical Assembly
	2.8	Sub-Bezel and Door
Section 3 – Adjustments	3.2	DSPEED
Section 4 – Troubleshooting	4.2	Introduction
	4.2	Using the Troubleshooting Flowchart
	4.3	Troubleshooting Flowchart
	4.4	Analog Card Version Identification
	4.5	DuoDisk Capacitor Fix
	4.5	Using the Analog Card Chip-Swapping Chart
	4.6	Analog Card Chip-Swapping Chart
Section 5 – Preventive Maintenance	5.2	Introduction
	5.2	Read/Write Head
	5.3	Head Load Button
	5.4	Motor Drive Belt
Section 6 – Additional Procedures	6.2	Special Repair Procedure for Loose Analog Boards
Illustrated Parts List	IPL.3	External Parts
	IPL.5	Internal Parts
	IPL.7	Analog Card

©Apple Computer, Inc., 1985–1988. No portion of this document may be reproduced in any form without the written permission of Apple Computer, Inc.

UniDisk and Apple IIGS are trademarks of Apple Computer, Inc.

DuoDisk, Apple, and the Apple logo are registered trademarks of Apple Computer, Inc.

Apple Technical Procedures

DuoDisk

Section 1 – Basics

❑ CONTENTS

1.2 Product Description
1.2 Model Comparison
1.2 Connecting the Drives

❑ PRODUCT DESCRIPTION

The Apple® DuoDisk® is effectively two disk drives in one case. Both drives are attached to a single analog card, with the drive on the left side defined as Drive 1.

There are four main modules that can be replaced: the interface card, the interface cable, the analog card, and the mechanical assembly. Chip swapping on the analog card is recommended before replacing the card.

Model Comparison

DuoDisk uses removable single-sided floppy disks to store and retrieve up to 143K of data per disk. The DuoDisk is compatible with any computer in the Apple II family, with the exception of the Apple IIc.

The contains the same drive mechanism as the Apple 5.25 Drive and UniDisk, but with a different sub-bezel.

Connecting the DuoDisk

The DuoDisk may be connected to a disk drive port (on an Apple IIGS™) or to a 5.25 Drive controller card installed in a peripheral slot (in an Apple II, II Plus, IIe, or IIGS). (The DuoDisk controller card is identical to the UniDisk™ or 5.25 Drive controller card.)

1. The controller card supports a maximum of one DuoDisk or two 5.25 drives. To add more drives, you must install a second 5.25 drive controller card. (You cannot plug a 3.5 drive into a 5.25 controller card, nor a DuoDisk into a 3.5 controller card.)

2. The disk drive port on the Apple IIGS will support a combination of up to four daisy chained 5.25 and 3.5 drives. A DuoDisk counts as *two* drives.

For installation instructions and daisy chain configurations, refer to the *DuoDisk Owner's Guide.*

Apple Technical Procedures

DuoDisk

Section 2 – Take-Apart

❑ CONTENTS

2.2 Introduction – Interchangeable Parts
2.3 Cover and Shield
2.4 Analog Board
2.6 Mechanical Assembly
2.8 Sub-Bezel and Door

Note: If a step is underlined, detailed instructions for that step can be found elsewhere in this section.

❑ INTRODUCTION – INTERCHANGEABLE PARTS

The same mechanical assembly is used in the DuoDisk, the UniDisk, and the Apple 5.25 Drive. However, the mechanical assembly service module may have either of two sub-bezels, shown in the figure below.

The sub-bezel designed for the Apple 5.25 Drive/ UniDisk is universal (that is, it will also fit in the DuoDisk), but the DuoDisk sub-bezel will not fit in the Apple 5.25 Drive or UniDisk. Therefore, if you receive a mechanical assembly with the DuoDisk sub-bezel and you wish to install the assembly in an Apple 5.25 Drive or UniDisk, you must swap the customer's sub-bezel with the DuoDisk sub-bezel before installation.

For all installations, be sure to swap the doors, if necessary, so that the colors are appropriate. The DuoDisk and UniDisk have beige doors. The Apple 5.25 Drive has a platinum door.

The procedures for replacement are given in "Sub-Bezel and Door" later in this Take-Apart section.

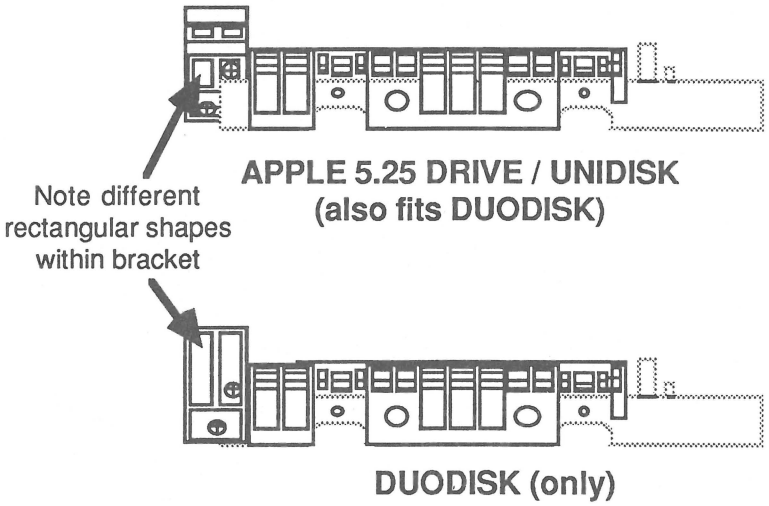

❑ COVER AND SHIELD

Materials Required

Medium Phillips screwdriver

Remove

To remove the top cover and shields:

1. Remove the two screws at the back of the unit, and remove the top cover.

2. Still facing the back of the unit, locate the right shield and remove the screw on the top. (This screw also secures one end of the ground strap.) Remove the right shield.

3. Now locate the left shield and remove the two screws that secure it to the chassis of the left drive.

4. Remove the screw that braces the left shield to the right drive, and remove the left shield.

Replace

To replace the shields and cover:

1. Position the DuoDisk with the back facing you.

2. Replace the metal shield on the left drive, fitting the front prongs into place. Make sure that the stepper motor cable on drive 2 fits through the semicircular cutout at the back of the shield.

3. Replace the two screws on the left drive shield and the one screw that fastens the left drive to the right drive.

4. Replace the shield on the right drive, and secure the shield and the ground strap with the top screw.

5. Slide the top cover into place, and replace the two screws at the back of the case.

❑ ANALOG BOARD

Remove

To remove the analog board:

1. Remove the top cover and right-drive shield.
2. Disconnect the read/write head cables (Figure 1, J1 and J2).

   Note: Always pull on the connector, not the wires.

3. Disconnect the stepper motor cables (Figure 1, J3 and J4). *Be sure to pull on the connector and not on the wire.*
4. Disconnect the LED cables (Figure 1, J6 and J7).
5. Remove the two screws, and slide the analog board out between the guides.

Replace

1. Lift the six connectors away from the mechanical assembly on the right drive, and position the analog board with the front through the guides.
2. Route the read/write head cables (Figure 1, J1) and stepper motor cables (Figure 1, J3) through their respective cutouts.
3. Secure the analog board with the two screws.
4. Reconnect the stepper motor cable (Figure 1, J3) for the right drive. If there is no key to indicate correct orientation, the side with "A2" should be face up. (There will be no wires for pins 1 and 2.)
5. Route the left-drive stepper motor cable through the cutout at the back of the shield, and connect it (Figure 1, J4).
6. Route the read/write head cable for the left drive through the cutouts, and connect it (Figure 1, J2). Make sure the shrink tubing fits in the cutouts.

   Note: The connector will fit on either way, so make sure that each pin of the fixture is aligned with a metal tab within the connector.

7. Reconnect the read/write head cable for drive 1 (Figure 1, J1).

8. Reconnect the LED cables for the left drive (Figure 1, J6) and for the right drive (Figure 1, J7).

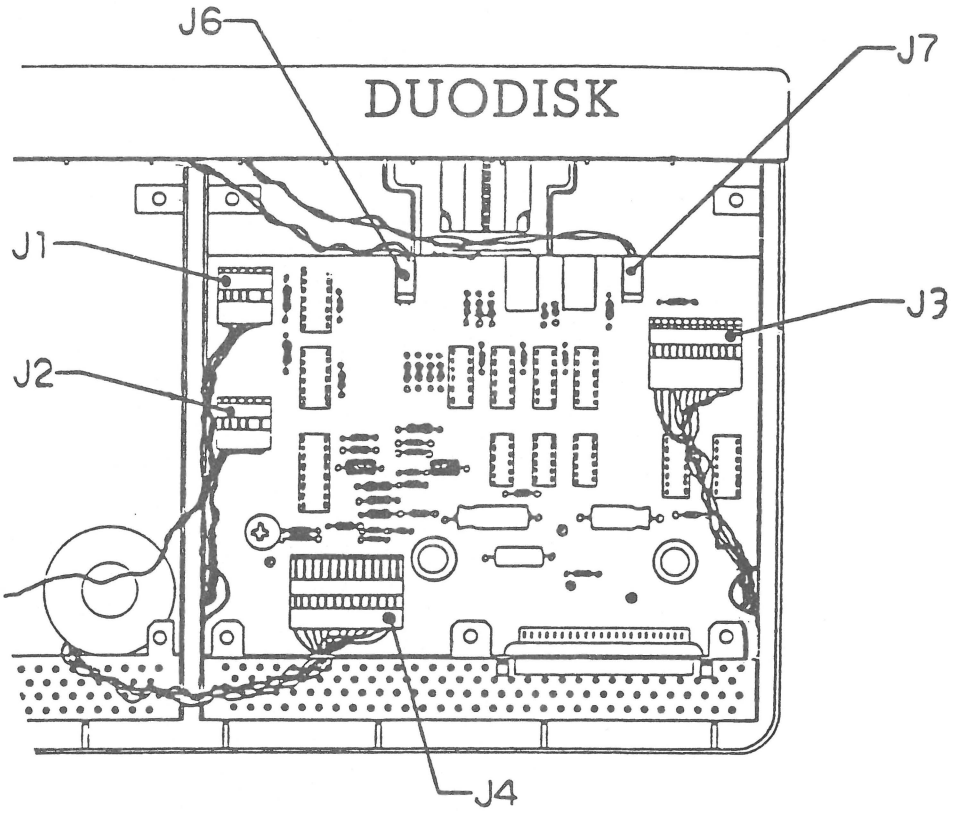

FIGURE 1

❑ MECHANICAL ASSEMBLY

If you are replacing a DuoDisk mechanical assembly with a UniDisk or 5.25 Drive mechanical assembly, see the Introduction at the beginning of this section.

Remove

To remove the mechanical assembly:

1. Remove the top cover, the shield, the cable, and the analog board.

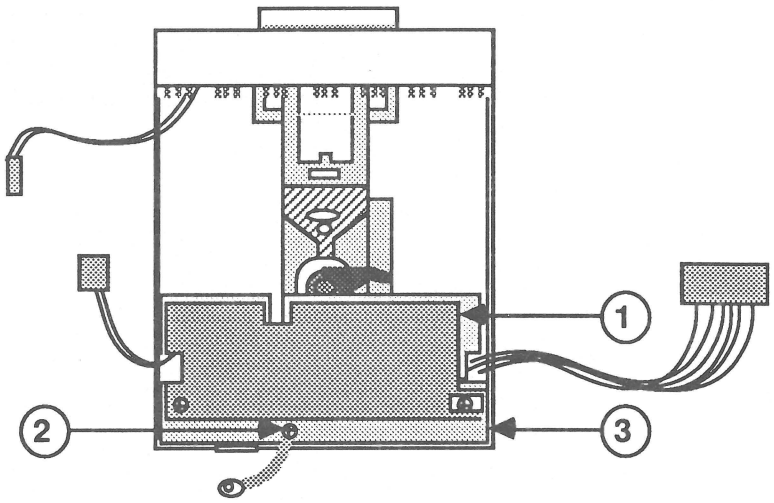

FIGURE 2

2. Remove the black insulation paper (Figure 2, #1).

3. Remove the Phillips screw (Figure 2, #2) that secures the ground strap to the chassis. Set the ground strap aside.

4. Lift off the metal shield (Figure 2, #3) and set it aside.

5. Turn the unit over and remove the four screws that secure the metal chassis to the plastic case.

6. Lift up on the back of the metal chassis, and slide it completely out of the case bottom.

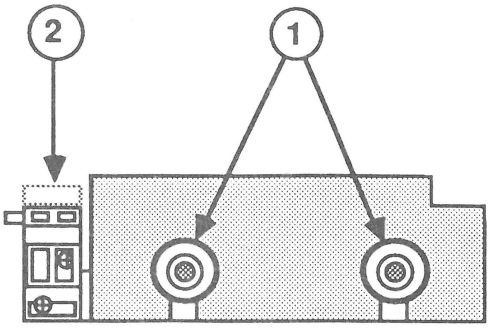

FIGURE 3

7. Orient the drive sideways, as shown in Figure 3, and remove the two Phillips screws (Figure 3, #1). Then turn the drive so that you face the other side, and remove those two screws.

8. Lift up on the sub-bezel (Figure 3, #2) and carefully slide the mechanical assembly out of its metal housing.

Replace

To replace the mechanical assembly:

1. Place the mechanical assembly back inside its metal housing.

2. Replace the Phillips screws (Figure 3, #1) on both sides of the drive to secure the mechanical assembly inside the metal housing.

3. Replace the metal shield (Figure 2, #3), routing the cables through the cutouts at the sides of the shield (see Figure 2).

4. Place the black insulation paper (Figure 2, #1) on the metal shield.

5. Replace the Phillips screw (Figure 2, #2) to secure one end of the ground strap to the chassis.

6. Close the door of the mechanical assembly.

7. Hold the LED cable out of the way while you carefully slide the mechanical assembly into the case bottom.

8. Replace the analog board, the cable, the shield, and the top cover.

❑ SUB-BEZEL AND DOOR

Remove

To remove the sub-bezel and door:

1. Remove the case top and shield, the cable, the analog board, and the mechanical assembly.

2. Remove the two Phillips screws at each side of the sub-bezel.

3. Slide the door and spring off the mechanical assembly.

Replace

To replace the sub-bezel and door:

1. Replace the door, making sure the side edges fit into the grooves on the metal carriage (Figure 4, #1) and the door springs fit over the supporting tabs (Figure 4, #2).

2. Replace the sub-bezel and its two Phillips screws.

   Note: A defective mechanical assembly must be returned to Apple with a sub-bezel attached.

3. Replace the case top and shield, the analog board, and the mechanical assembly.

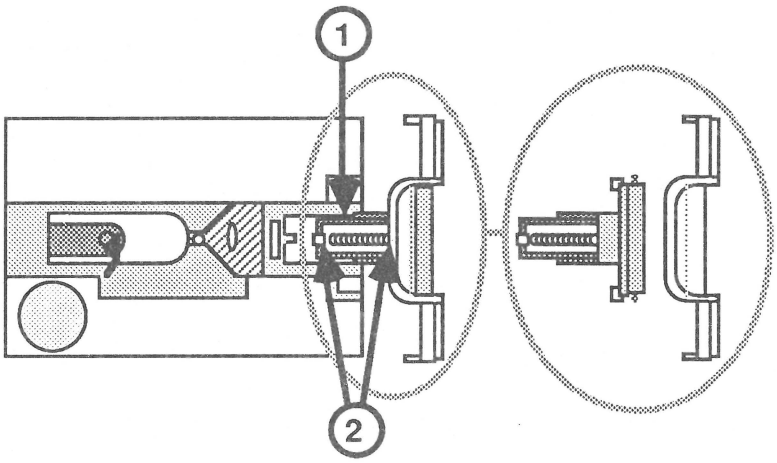

FIGURE 4

Apple Technical Procedures

DuoDisk

Section 3 – Adjustments

❑ CONTENTS

3.2 DSPEED

❑ DSPEED

This adjustment procedure was written to be used with the *Apple 5.25-Inch Disk Drive Diagnostic*—if the test indicates that you need to adjust the drive speed. All information on setting up and running the diagnostic is in the *Disk Drives Technical Procedures,* Section 1, 5.25-Inch Disk Drive Diagnostic.

Materials Required

Apple 5.25-Inch Disk Drive Diagnostic diskette
Disk Drives Technical Procedures
A small (jeweler's) flatblade screwdriver
Apple II, II Plus, IIe, or IIGS with video display
DuoDisk to be adjusted
DuoDisk interface card

Making the Adjustment

To adjust the DSPEED (drive speed):

1. The "working" drive should be connected to the analog card as drive 1, the drive to be adjusted connected as drive 2.

2. You should have the diagnostic running; if you do not, see the *Disk Drives Technical Procedures,* Section 1, 5.25-Inch Disk Drive Diagnostic.

3. Locate the DSPEED adjustment hole under the drive being tested. It is a small hole near the front of the drive. The adjustment screw is located inside the hole.

   Note: When you make the DSPEED adjustment, keep the DuoDisk flat.

4. The adjustment is extremely sensitive, so turn the adjustment screw very slowly. The indicator on the screen will move back and forth, showing changes of the speed.

5. Adjust the speed so that it is within the "good" range, as close to 0 as possible. Let the test run for 30 seconds.

6. Press <Escape> to return to the main menu; then repeat the test.

   Does the DSPEED now stay within the "good" range?

   - Yes—Press <Escape> to return to the main menu.

   - No—If the DSPEED cannot be properly adjusted, return the faulty drive mechanism to Apple.

7. Remove the *Apple 5.25-Inch Disk Drive Diagnostic* diskette from the drive.

Apple Technical Procedures

DuoDisk

Section 4 – Troubleshooting

❑ CONTENTS

4.2 Introduction
4.2 Using the Troubleshooting Flowchart
4.3 Troubleshooting Flowchart
4.4 Analog Card Version Identification
4.5 DuoDisk Capacitor Fix
4.5 Using the Analog Card Chip-Swapping Chart
4.6 Analog Card Chip-Swapping Chart

❑ INTRODUCTION

The Apple DuoDisk disk drive is effectively two disk drives in one case. Both drives are attached to a single analog card, with the drive on the left side defined as drive 1.

There are four main modules that can be replaced: the interface card, the interface cable, the analog card, and the mechanical assembly. Chip swapping on the analog card is recommended before replacing the card.

❑ USING THE TROUBLESHOOTING FLOWCHART

Whenever a customer brings in a malfunctioning DuoDisk, use the flowchart on the following page as a troubleshooting guide. Begin with the box at the upper left corner of the page. When you get to one of the answer boxes, swap the modules, one at a time, in the order in which they are listed. Each time you swap a module, go back to the beginning of the flowchart and try to boot a system diskette (preferably a *ProDOS System Master*).

Once you are able to boot the system diskette, run the *Apple 5.25-Inch Disk Drive Diagnostic* and perform any adjustments necessary. Reinstall the customer's modules, one at a time, and run the drive diagnostic after each exchange to isolate the bad modules.

TROUBLESHOOTING FLOWCHART

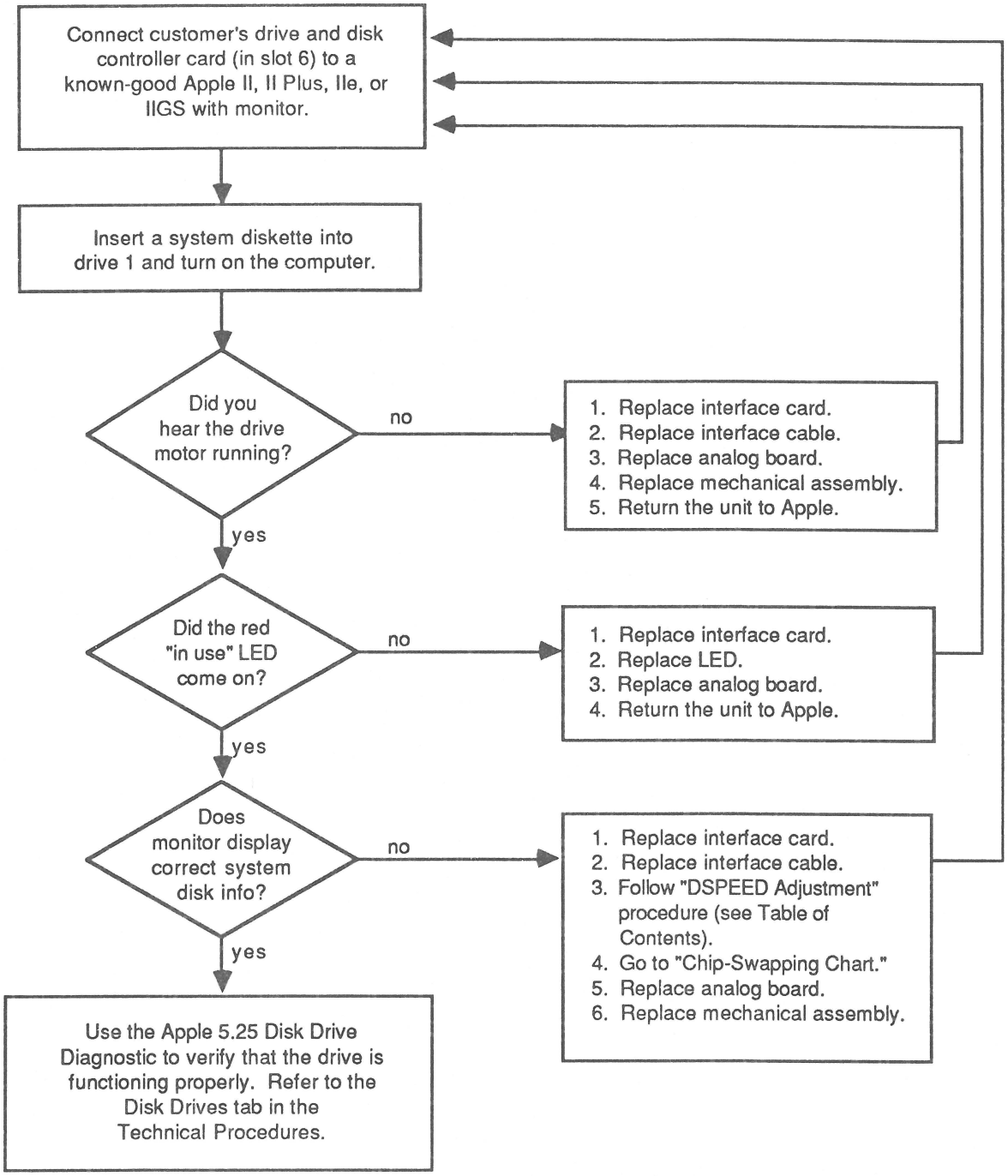

❑ ANALOG CARD VERSION IDENTIFICATION

Remove the DuoDisk cover and shield to access the analog card (see Section 3, Take-Apart).

There are three different versions of the analog card. Identify which card you have by the engineering number on the card (see Figure 1, #1 and Figure 2, #1). Figure 1 shows the layout of cards with engineering numbers 676-[ ]101 and 676-[ ]102. Figure 2 shows the layout of cards with engineering number 676-[ ]107.

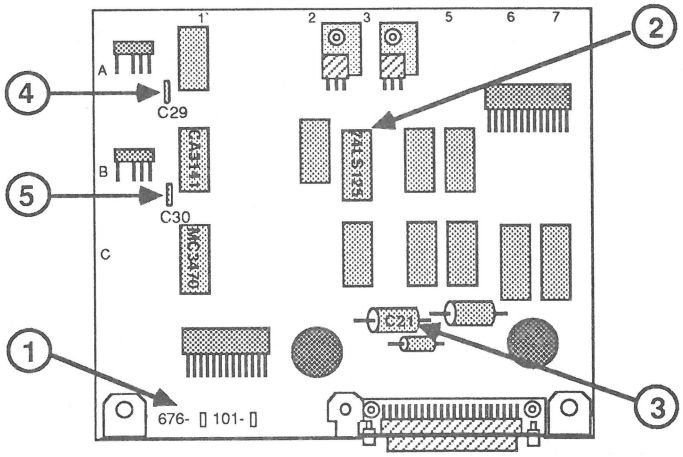

FIGURE 1

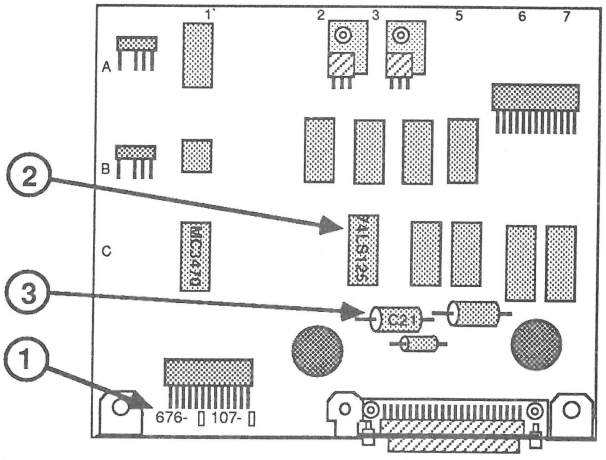

FIGURE 2

❑ DUODISK CAPACITOR FIX

It is possible for the DuoDisk to destroy data on the diskette. This destruction can occur when attempting the <Open-Apple><Control><Reset> technique for rebooting, or when using software with certain copy-protection schemes. If a unit exhibits this problem but passes the *Apple 5.25-Inch Disk Drive Diagnostic*, check the analog board. Analog boards with part numbers 676-[ ]101 and 676-[ ]102 may have this problem. The fix is to carefully identify and cut the two capacitors off the board. The capacitors, labeled C29 and C30, are in zones B1 and A1 (see Figure 1, #4 and #5 and the chip-swapping chart on the next page). Use small wire clippers or simply jiggle the capacitors to snap the connections.

❑ USING THE ANALOG CARD CHIP-SWAPPING CHART

The chip-swapping chart on the following page can be used for drive 1 or drive 2.

> ***Note:*** Before replacing any chips, carefully inspect the card for melted or broken components, particularly the 74LS125 (see Figure 1, #2, or Figure 2, #2) and C21 (see Figure 1, #3, or Figure 2, #3). If you notice fuzz on the card, return the card to Apple. The presence of fuzz usually means that the computer was on while the card was being installed and that capacitor C21 has exploded.

To use the chip-swapping chart, identify the symptom and replace the related chips, one at a time, in the order in which they are listed. Each time you replace a chip, turn the computer on to see if the problem is gone. If the problem still exists after you have replaced all the related chips, return to your place on the troubleshooting flowchart and continue with the next step in the box.

❑ ANALOG CARD CHIP-SWAPPING CHART

Symptom	Location	Defective Chip Type
• *Motor and LED on, but disk won't boot*	B1 B3* C3** C1	CA3141* 74LS125 74LS125 MC3470
• *Drive reads but does not write*	B1 B3	CA3141* 74LS125
• *Data on disk is damaged when using <Open-Apple><Control><Reset> **or** certain copy-protected software—**but** the unit (containing an analog card numbered 676-[ ]101 or 676-[ ]102) passes the Apple 5.25-Inch Disk Drive Diagnostic.*	A1 B1	Capacitor C29* Capacitor C30* (remove both; do not replace)

* Analog card engineering numbers 676-[ ]101 or 676-[ ]102 only.

** Analog card engineering number 676-[ ]107 only.

Apple Technical Procedures

DuoDisk

Section 5 – Preventive Maintenance

❑ CONTENTS

5.2 Introduction
5.2 Read/Write Head
5.3 Head Load Button
5.4 Motor Drive Belt

Note: If a step is underlined, detailed instructions for that step can be found in Section 2, Take-Apart.

❑ INTRODUCTION

The read/write head should be cleaned any time the computer or disk drive is being serviced. The head load button should be replaced whenever it is worn or dirty. The motor drive belt should be inspected any time the disk drive is being serviced.

❑ READ/WRITE HEAD

Materials Required

#2 Phillips screwdriver
Cotton swabs
Isopropyl Alcohol (80% alcohol/20% water)

Procedure

To service the read/write head:

1. Remove the top cover, drive shield, and analog board
2. Clean the guide rails with the isopropyl alcohol. **Do not** use grease.
3. Inspect the head for worn or dull spots in the ceramic. If you find any, replace the mechanical assembly.
4. Clean the head with the isopropyl alcohol.
5. Move the read/write head assembly back and forth along the full length of its travel. Check for any blockage or friction. If there is any, replace the mechanical assembly.
6. Replace the analog board, drive shield, and top cover.

❑ HEAD LOAD BUTTON

Materials Required

#2 Phillips screwdriver
Needlenose pliers
Head load button

Procedure

To service the head load button:

1. Remove the top cover, drive shield, and analog board.

2. Lift up the head load arm. If the head load button is worn or dirty, squeeze the top part of the load button with small needlenose pliers, and let the button drop down.

3. Insert the new load button into the head load arm. Press the button until it snaps into place.

5. Replace the analog board, drive shield, and top cover.

❑ MOTOR DRIVE BELT

Materials Required

#2 Phillips screwdriver
Motor drive belt

Procedure

To service the motor drive belt:

1. Remove the case, and the top and bottom shield.
2. Turn the drive upside down, and locate the motor dirve belt. Check the belt for cracks, slippage, and elasticity. If the belt is dry or cracked, or if it slips, continue with step 3.
3. Slip the belt off the pulley.
4. Place the new belt around the motor spindle and then slip it around the pulley.
5. Replace the top and bottom shield, and the case.

Apple Technical Procedures

DuoDisk

Section 6 – Additional Procedures

❑ CONTENTS

6.2 Special Repair Procedure for Loose Analog Boards

❑ SPECIAL REPAIR PROCEDURES

Background

Some DuoDisks with serial numbers before 325000 have loose analog boards that may slip out of their guide tracks (the forward supports on the sides of the shield). This brings the analog board into contact with the disk mechanical assembly and may short-circuit the board.

Procedure

If you are repairing one of these drives:

1. Check the serial number of the DuoDisk: If it is below 325000, continue with this procedure.

2. Using needlenose pliers, bend the top of the shield inward about 1 mm, so that the guides hold the analog board firmly in place.

WARNING: *Do not bend the shield too far, as any stress on the mechanical assembly may cause problems with head radial alignment.*

3. Run the *Apple 5.25-Inch Disk Drive Diagnostic*, to check for possible head radial alignment problems caused by stress on the mechanical assembly. If there is such a problem, bend the shield back until alignment problems no longer occur. If the drive continues to fail the diagnostic, send the drive back to Apple for repair.

4. Look through the disk drive door to make sure that the analog board is seated correctly. If the analog board still falls off its supports, repeat steps 2–4.

Apple Technical Procedures

DuoDisk

Illustrated Parts List

❑ CONTENTS

IPL.3 External Parts (Figure 1)
IPL.5 Internal Parts (Figure 2)
IPL.7 Analog Card (Figure 3)

The figures and lists in this section include all piece parts that can be purchased separately from Apple for the DuoDisk, along with their part numbers. These are the only parts available from Apple. Refer to your *Apple Service Programs Manual* for prices.

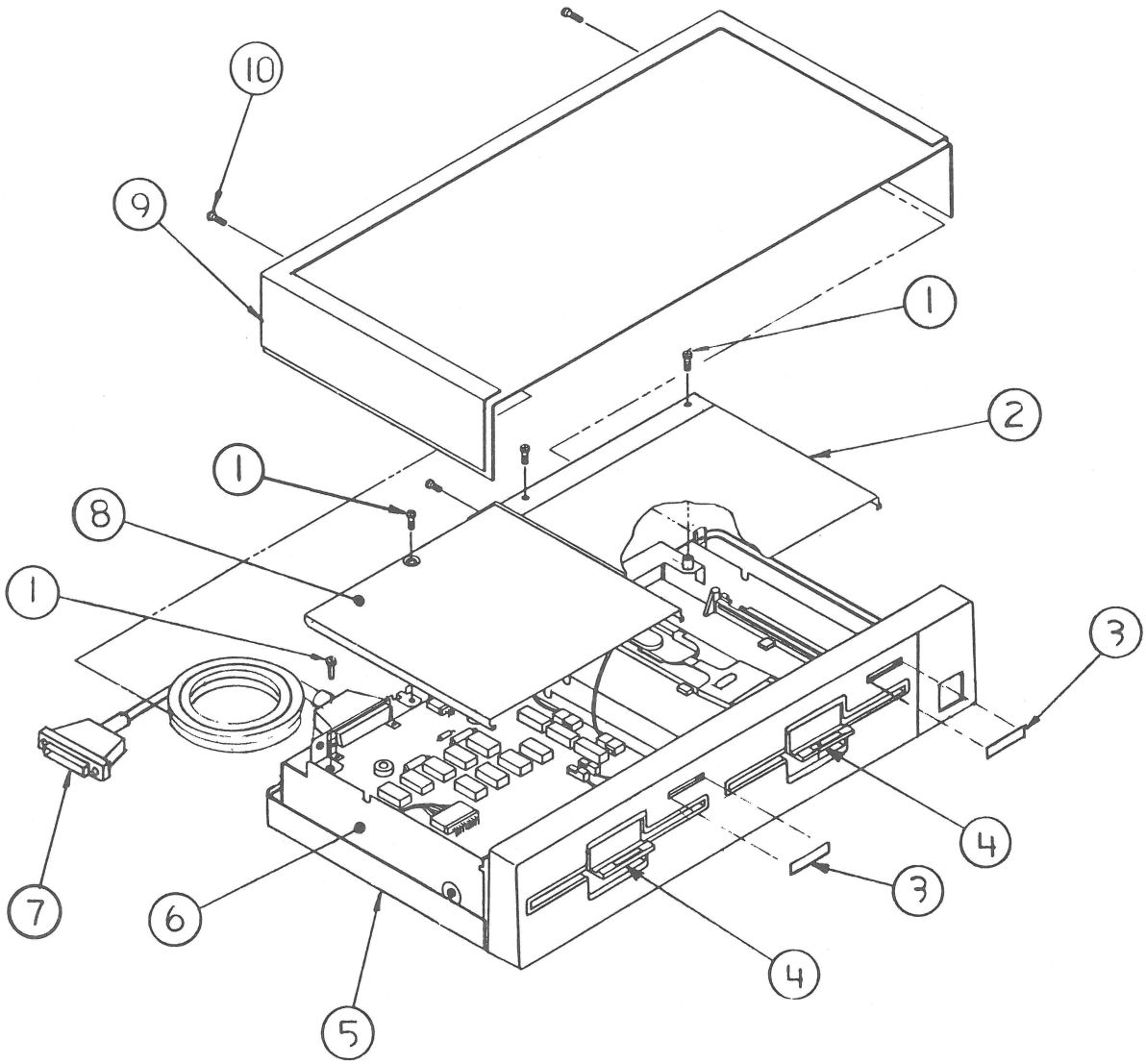

FIGURE 1

❑ EXTERNAL PARTS (Figure 1)

Item	Part No.	Description
1	400-1604	Screw, 6-32 x 1/4
2	805-5002	Drive 2 Top Shield
3	825-0548	Uni/DuoDisk Drive # Label
4	815-0637	Door, Beige
5	676-5101	Subassembly Bottom Cover
6	805-5000	DuoDisk Shield
7	590-0114	DuoDisk Cable
8	805-5001	Drive 1 Top Shield
9	676-5103	Top Cover Assembly
10	415-1410	Screw, M3.5 x 6 x 10mm, PN

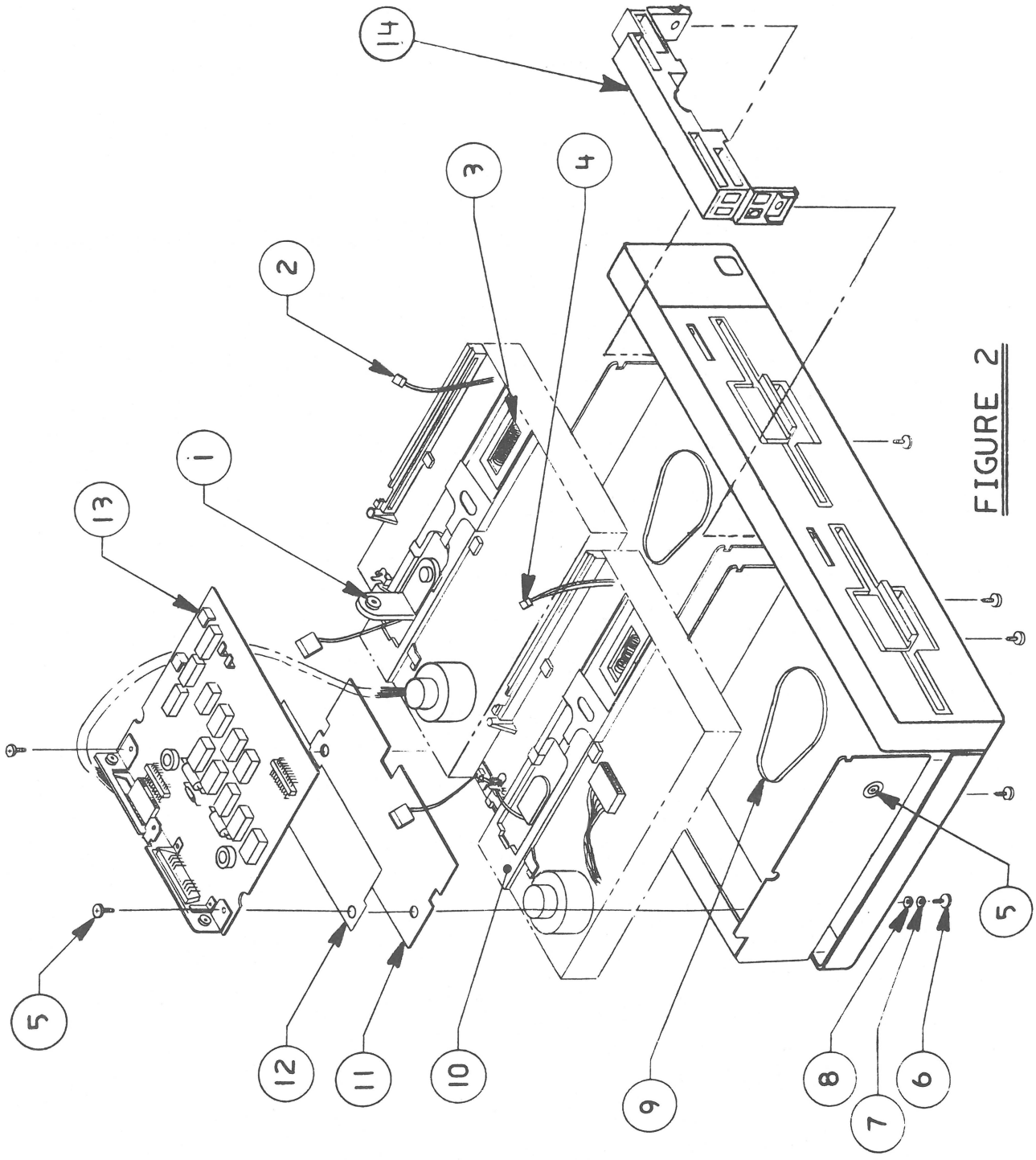

FIGURE 2

❑ INTERNAL PARTS (Figure 2)

Item	Part No.	Description
1	U815-0064	Load Button
2	590-0223	LED Cable Assembly, Drive 2
3	870-0023	Spring, Disk Door
4	590-0140	LED Cable Assembly, Drive 1
5	400-1604	Screw, 6-32 x 1/4
6	407-1605	Screw, 6-32 x 5/16 Pan Head
7	860-0242	Washer, M3.5 x 4.0 I.D. x 7.0 O.D.
8	860-0053	Washer, Split Lock Metric, M3.5
9	U880-0002	Disk Drive Belt
10	661-72128	Uni/DuoDisk Disk Mechanical Assembly
11	805-5028	Shield Plate
12	805-5029	Insulating Seat
13	661-92130	DuoDisk Analog Card
14	970-1258	Sub-Bezel, Uni/DuoDisk, Beige

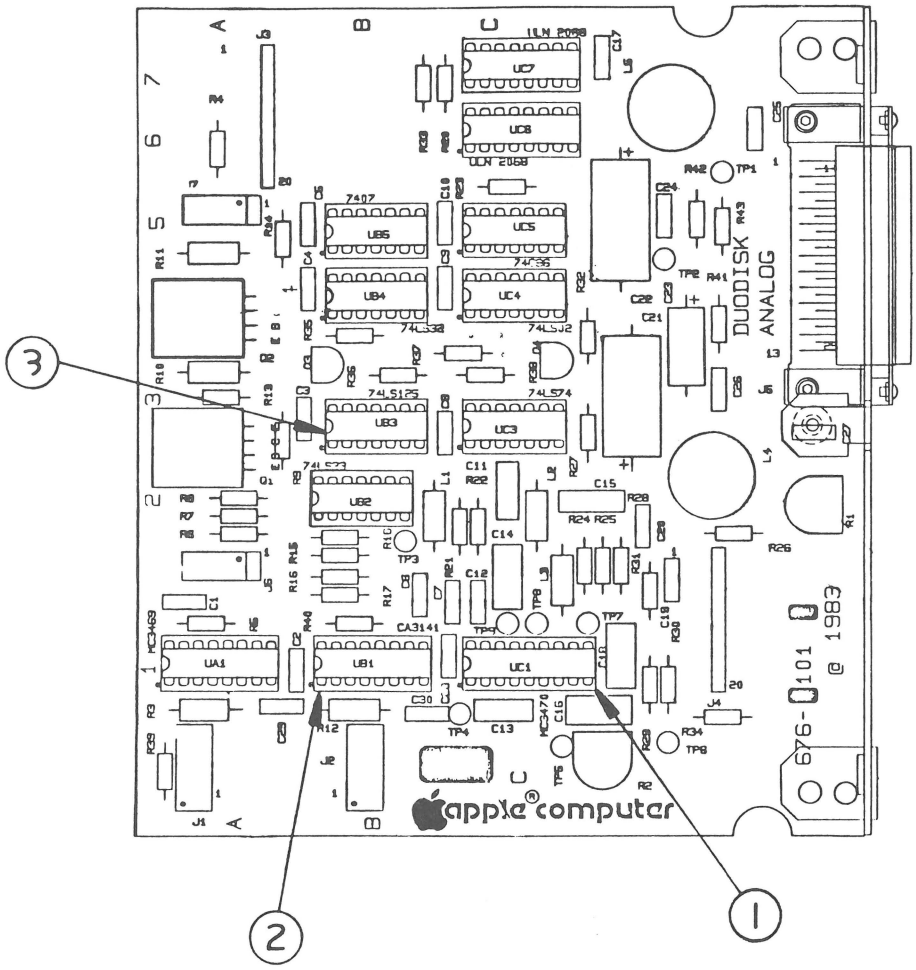

FIGURE 3

❑ ANALOG CARD (Figure 3)

Item	Part No.	Description
1	355-3470	IC, MC3470 Floppy Disk Read Ampl.
2	352-3141	IC, High Voltage Diode 30V, 100 mA
3	306-0125	IC, 74LS125

APPLE IIc FLAT PANEL DISPLAY TECHNICAL PROCEDURES

TABLE OF CONTENTS

Section 1 - Troubleshooting

Introduction.....1.1
Flat Panel Display Troubleshooting Flowchart.....1.2

Section 2 - Diagnostics

(See Note).....2.1

Section 3 - Take-Apart

Introduction.....3.3
Opening the Flat Panel Display Case.....3.5
Removing the Flat Panel Liquid Crystal Display (LCD).....3.5
Installing the Flat Panel Liquid Crystal Display (LCD).....3.7
Removing the Contrast Card.....3.9
Installing the Contrast Card.....3.9
Removing the Inverter Switch Cover.....3.11
Installing the Inverter Switch Cover.....3.11
Removing the Connector Box.....3.13
Installing a Connector Box.....3.13
Removing the Ribbon Cable.....3.15
Installing the Ribbon Cable.....3.17

Section 4 - Illustrated Parts List

Illustrated Parts List and Diagrams.....4.2

©Apple Computer, Inc., 1985.
No part of this document may be reproduced in any form without the written permission of Apple Computer, Inc.

Apple and the Apple logo are registered trademarks of Apple Computer, Inc.

Apple IIc Flat Panel Display Technical Procedures

Section 1

Troubleshooting

Contents:

Introduction.....1.2
Symptom Table.....1.3

INTRODUCTION

The Apple IIc Flat Panel Display consists of the following electronic replaceable modules:

1. The Liquid Crystal Display (LCD)

2. The contrast card

3. The connector box

4. The ribbon cable

The Symptom Table on the following page shows possible failure symptoms and an action to be taken to rectify the problem. The best way to use this table is:

1. Look on the chart to find the symptom shown by the defective Flat Panel Display.

2. Try the recommended actions in the order in which they are listed.

SYMPTOM	ACTION
NO DISPLAY	Check that all connectors are secure inside the display panel. Check that the ribbon cable is connected inside the connector box. Replace the Liquid Crystal Display Replace the connector box. Replace the ribbon cable
NOT ABLE TO ADJUST CONTRAST	Replace the contrast card
INVERTER SWITCH NOT WORKING	Replace the contrast card
GARBAGE DISPLAY	Replace the connector box Replace the Liquid Crystal Display Replace the contrast card

Apple IIc Flat Panel Display Technical Procedures

Section 2

Diagnostics

NOTE: USE THE APPLE IIc DIAGNOSTIC DISKETTE (VIDEO TEST) TO TEST THE FLAT PANEL DISPLAY. REFER TO THE APPLE IIc TECHNICAL PROCEDURES IF YOU DO NOT KNOW HOW TO USE THE DIAGNOSTIC DISKETTE.

Apple IIc Flat Panel Display Technical Procedures

Section 3

Take-Apart

Contents:

Introduction.....3.3
Opening the Flat Panel Display Case.....3.5
Removing the Flat Panel Liquid Crystal Display (LCD).....3.5
Installing the Flat Panel Liquid Crystal Display (LCD)...3.7
Removing the Contrast Card.....3.9
Installing the Contrast Card.....3.9
Removing the Inverter Switch Cover.....3.11
Installing the Inverter Switch Cover.....3.11
Removing the Connector Box.....3.13
Installing a Connector Box.....3.13
Removing the Ribbon Cable.....3.15
Installing the Ribbon Cable.....3.17

INTRODUCTION

The Flat Panel Display is a peripheral product for the Apple IIc Computer. It is made up of two major modules: the display panel (Figure 1, #1) and the connector box (Figure 1, #2). Figure 1, #3 shows the flat ribbon cable which connects the two modules. The Flat Panel Display is powered by the Apple IIc extended video port; **no additional power source is required**.

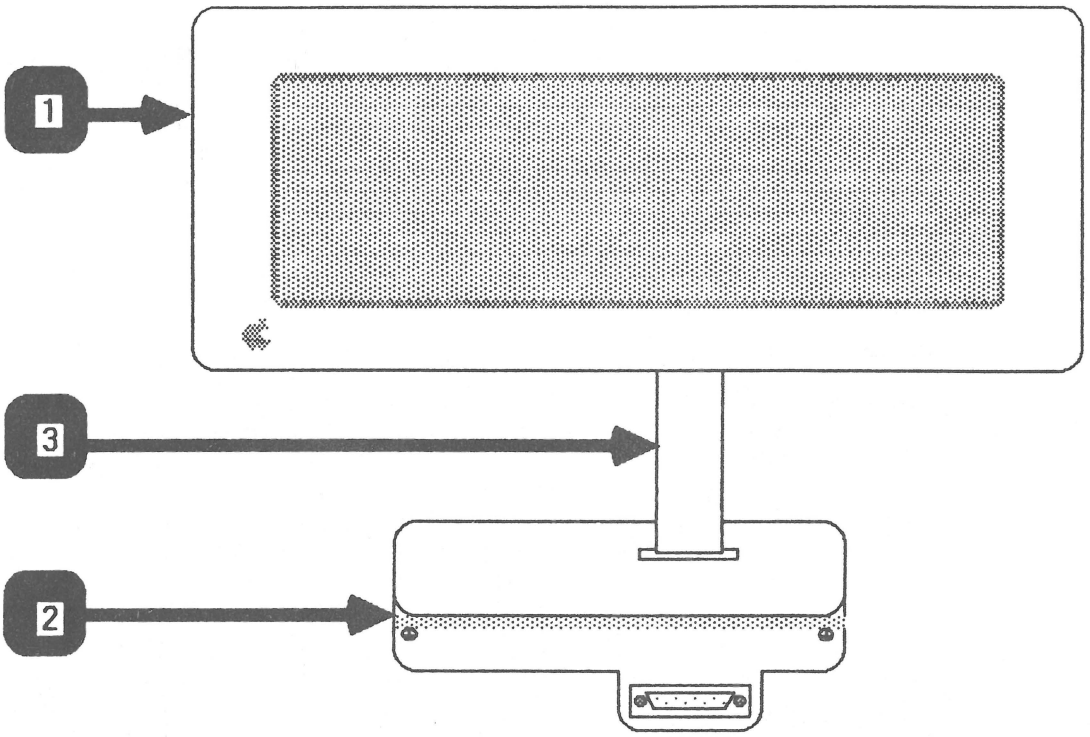

FIGURE 1

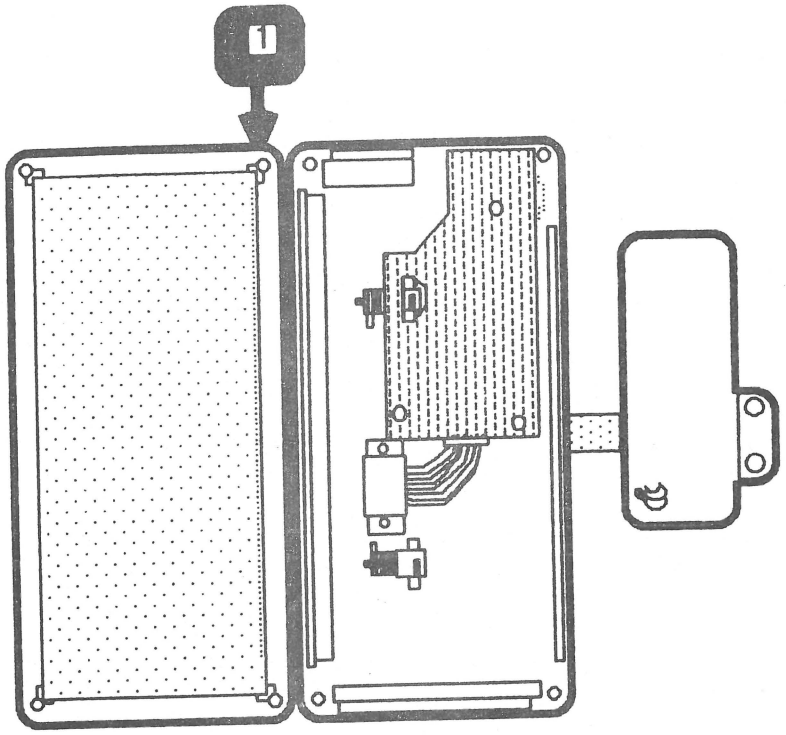

FIGURE 4

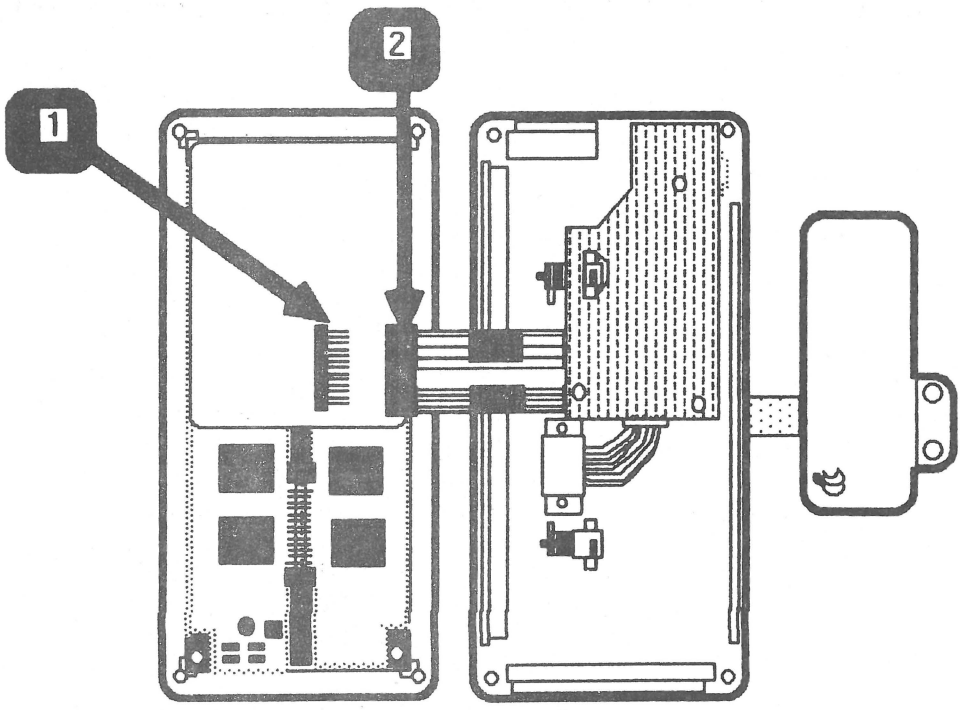

FIGURE 5

Install (LCD)

1. Place the both halves of the Flat Panel Display case on a protective foam pad, and orient them as shown in Figure 4.

   NOTE: The Apple logo should be positioned as shown in Figure 4, #1.

2. Place the LCD in the front panel with the connector (Figure 5, #1) on the right half of the LCD (pins pointing to the right).

3. Press down on the LCD until it snaps into place on all sides.

4. Connect the contrast card connector (Figure 5, #2) to the LCD (Figure 5, #1).

5. Fold the LCD over and onto the back half of the Flat Panel Display.

6. Press the two halves together until all fours sides snap into place.

7. Replace the Phillips screws.

8. Use the Apple IIc Diagnostic Diskette (video test) to make sure that the Flat Panel Display is functioning properly.

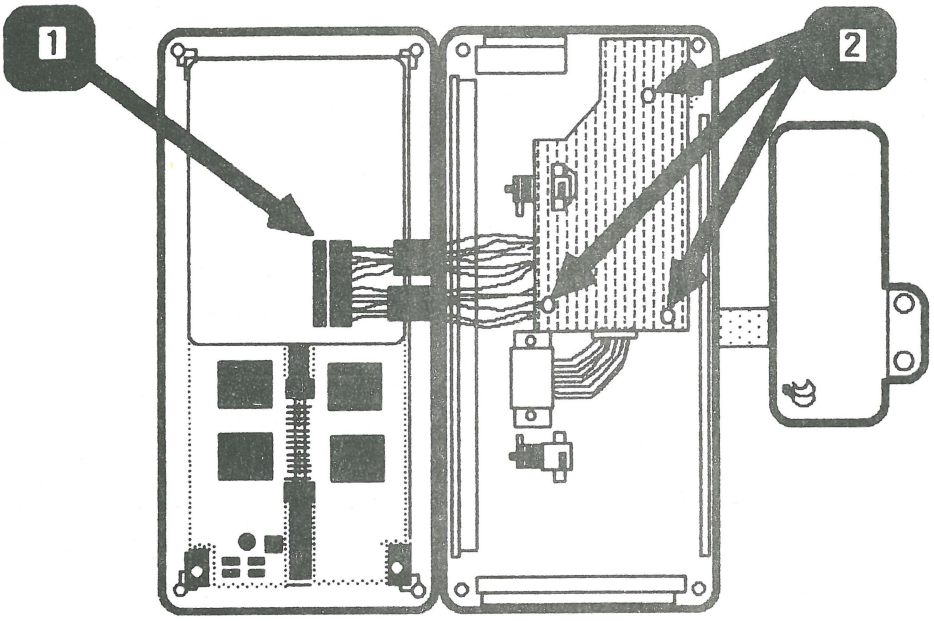

FIGURE 6

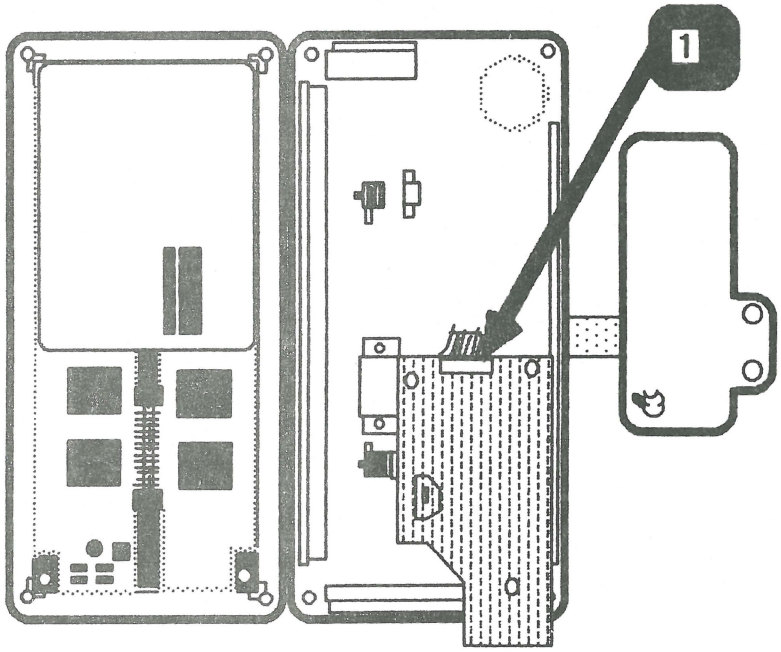

FIGURE 7

REMOVE AND INSTALL CONTRAST CARD

Removing the Contrast Card

1. Follow the steps listed under " Opening the Flat Panel Display Case").

2. Disconnect the contrast card connector (Figure 6, #1) from the LCD.

3. Remove the Phillips screws (Figure 6, #2) which secure the card to the case and lift the card out.

4. Flip the contrast card over so that you can easily access the ribbon cable connector (Figure 7, #1).

5. Disconnect the ribbon cable connector from the contrast card.

Installing the Contrast Card

1. Connect the ribbon cable (coming from connector box) to the contrast card with the solid side of the connector facing up. (See Figure 7, #1.)

2. Place the contrast card on the plastic support posts as shown in Figure 6.

3. Replace the Phillips screws (Figure 6, #2) to secure the card to rear panel.

4. Connect the LCD connector to the LCD. (See Figure 6, #1.)

5. Fold the LCD over and onto the back half of the Flat Panel Display.

6. Press the two halves together until all fours sides snap into place.

7. Replace the Phillips screws.

8. Use the Apple IIc Diagnostic Diskette (video test) to make sure the Flat Panel Display is functioning properly

REMOVE AND INSTALL INVERTER SWITCH COVER

Removing the Inverter Switch Cover

1. Follow the steps listed under "Remove the Contrast Card."

   NOTE: The inverter switch cover may stay with the contrast card as you remove it. If it is not on the card, it is inside the flat panel case.

2. Remove the inverter switch cover from inside the flat panel case or from the contrast card, whichever the case may be.

Installing the Inverter Switch Cover

1. Place the switch cover in the slot located at the upper left corner of the back case. There is only one way the switch cover will fit.

2. Follow the steps listed under "Replacing the Contrast Card".

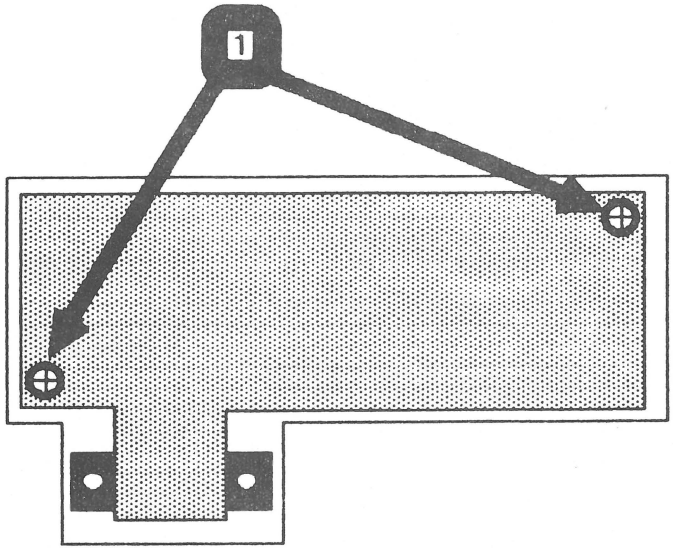

FIGURE 8

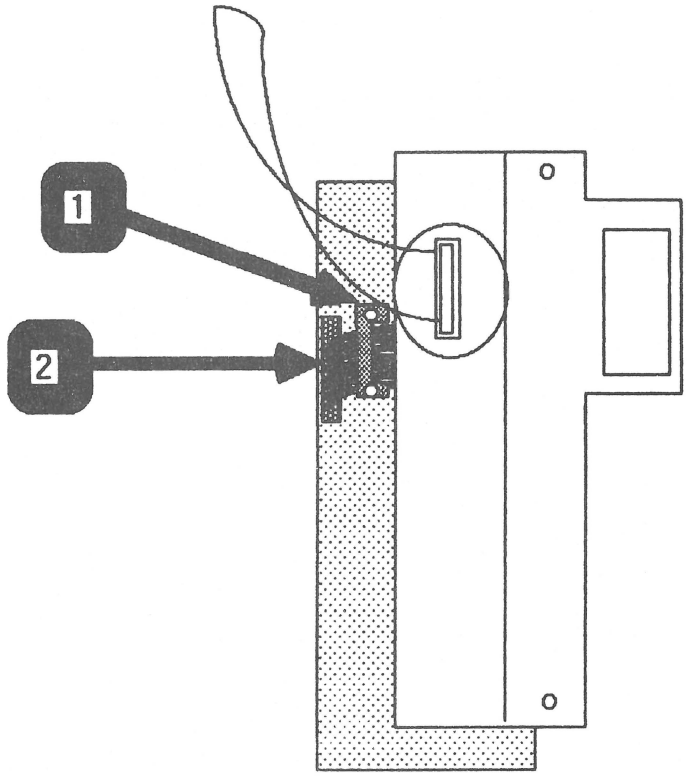

FIGURE 9

REMOVE AND INSTALL CONNECTOR BOX

Removing the Connector Box

1. Remove the two Phillips screws located at either side of the connector box case.

2. Carefully pry the case open.

3. Remove the two Phillips screws (Figure 8, #1) which secure the metal connector box to the case.

4. Push the DB-15 connector toward the inside of the plastic case until you can grasp the edges of the metal connector box.

5. Use a jeweler's Phillips screwdriver to remove the screws located at either side of the cable clamp (Figure 9, #1).

6. Disconnect the ribbon cable (Figure 9, #2) from the connector box, then lift the box completely out of the case.

Installing the Connector Box

1. Connect the ribbon cable to the socket at the bottom of the metal connector box. Push the connector down into the socket as far as it will go. (See Figure 9, #2.)

2. Replace the cable clamp as shown in Figure 9, #1.

3. Place the connector box inside the case so that the DB-15 connector protrudes through the opening at the bottom of the case.

4. Replace the screws (Figure 8, #1) to secure the connector box to its plastic case.

5. Place the rear panel on the case and press until it snaps into place.

6. Replace the Phillips screws on both sides of the case.

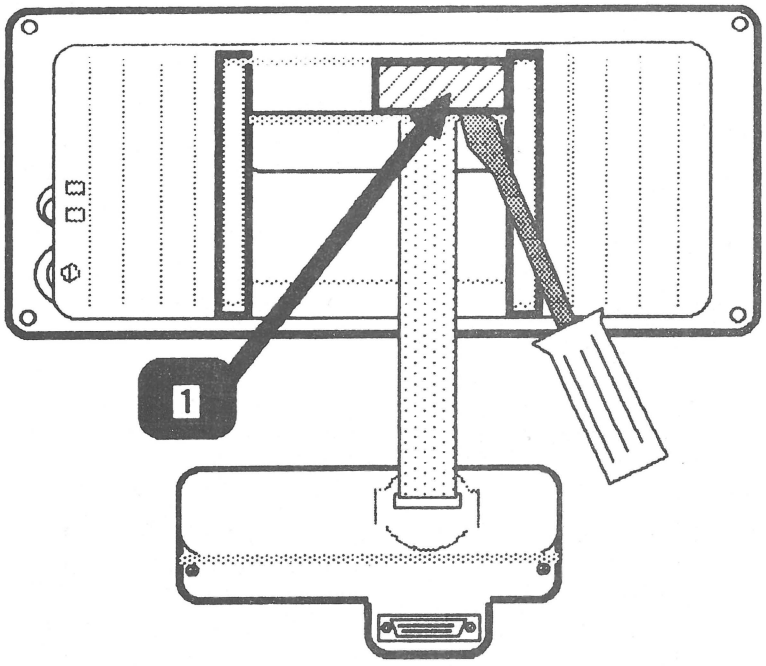

FIGURE 10

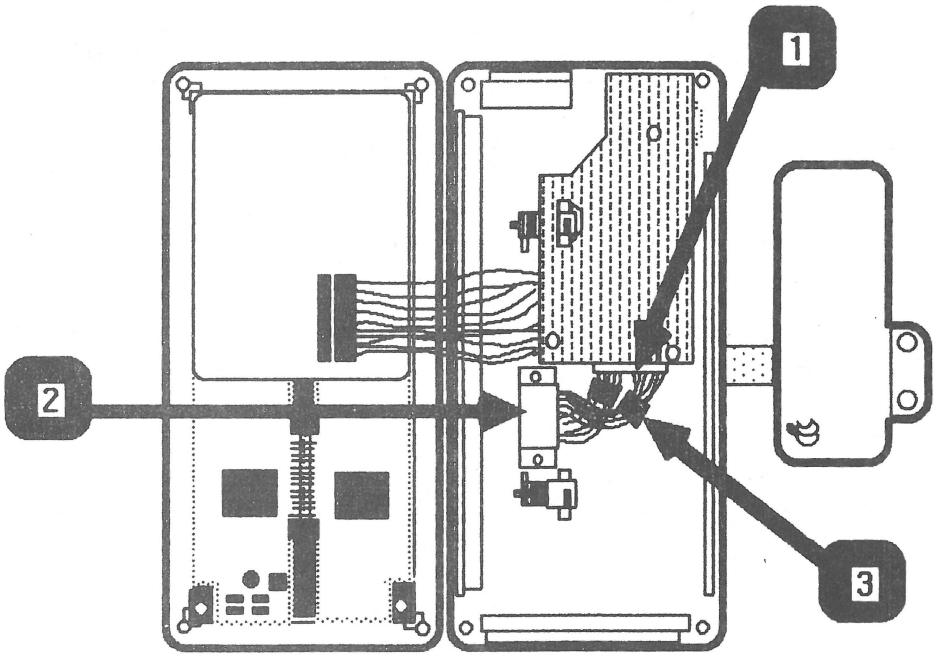

FIGURE 11

REMOVE AND INSTALL THE RIBBON CABLE

Removing the Ribbon Cable

1. Place the Flat Panel Display face down on a protective foam pad and orient it as shown in Figure 10.

2. Follow the steps listed under **"Opening the Flat Panel Display Case"**.

3. Disconnect the ribbon cable connector (Figure 11, #1) from the contrast card.

4. Remove the two Phillips screws which secure the ribbon cable clamp (Figure 11, #2) to the Flat Panel Display case. Lift the clamp off the plastic alignment posts.

5. Use a flatblade screwdriver to pry off the flat panel cable brace (Figure 10, #1).

IMPORTANT: IF THERE ARE TWO TOROID RINGS ON THE RIBBON CABLE AS SHOWN IN THE FIGURE 11, #3, CAREFULLY SQUEEZE THE RINGS (ONE AT A TIME) WITH A PAIR OF PLIERS UNTIL THE RINGS BREAK OFF THE CABLE.

6. Slide the cable out through the opening in the back case of the flat panel.

7. Follow the steps listed under **"Removing the Connector Box"**.

8. Slide the toroid ring (Figure 12, #1) over the connector box cable and set it aside.

9. Use a small flatblade screwdriver to pry the sides of the plastic cable brace (Figure 12, #2) until it is free from the case.

10. Slide the ribbon cable out (toward the inside of the case) through the opening in the connector box case.

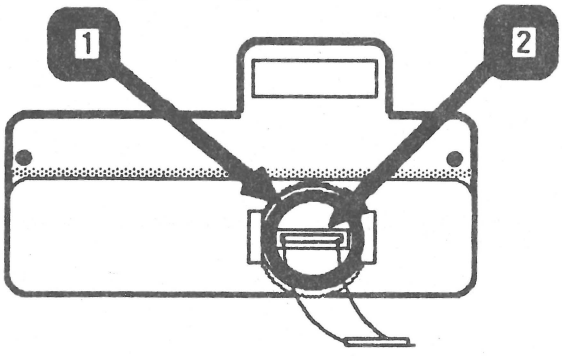

FIGURE 12

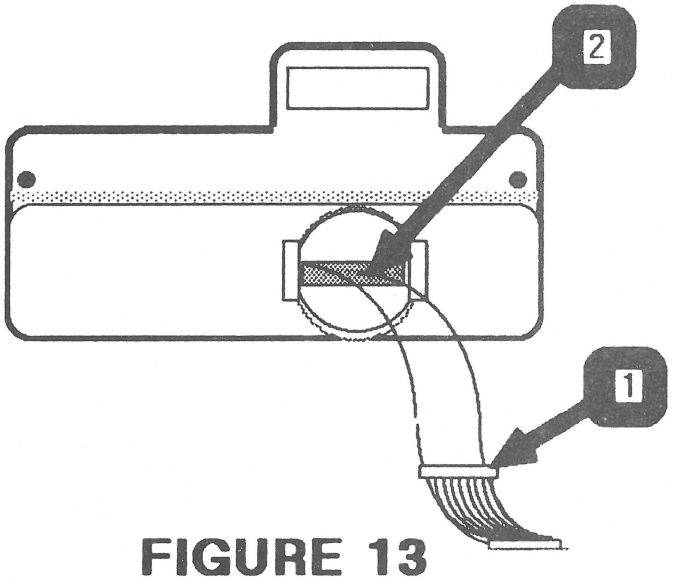

FIGURE 13

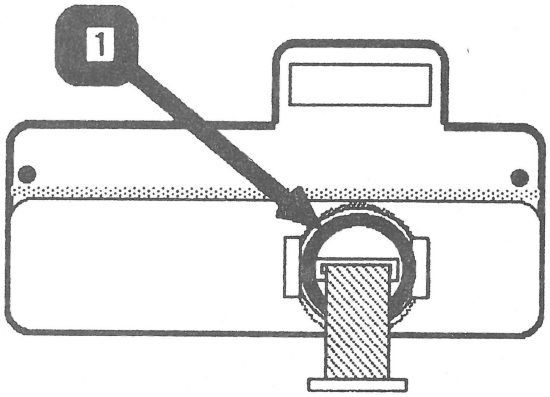

FIGURE 14

Installing the Ribbon Cable

1. Slip the end of the ribbon cable (without the plastic cable brace) through the opening on the inside of the connector box case. (See Figure 13.)

   Pull the cable through the connector box case until the plastic cable brace (Figure 13, #1) meets the slot (Figure 13, #2) on the inside of the case.

2. Push the plastic cable brace into its fitting (slot) until it is snug.

   NOTE: The back side of the plastic cable brace should protrude through the outside of the connector box case.

3. Slip the the toroid ring (Figure 14, #1) back over the ribbon cable.

4. Follow the steps listed under "**Installing the Connector Box**".

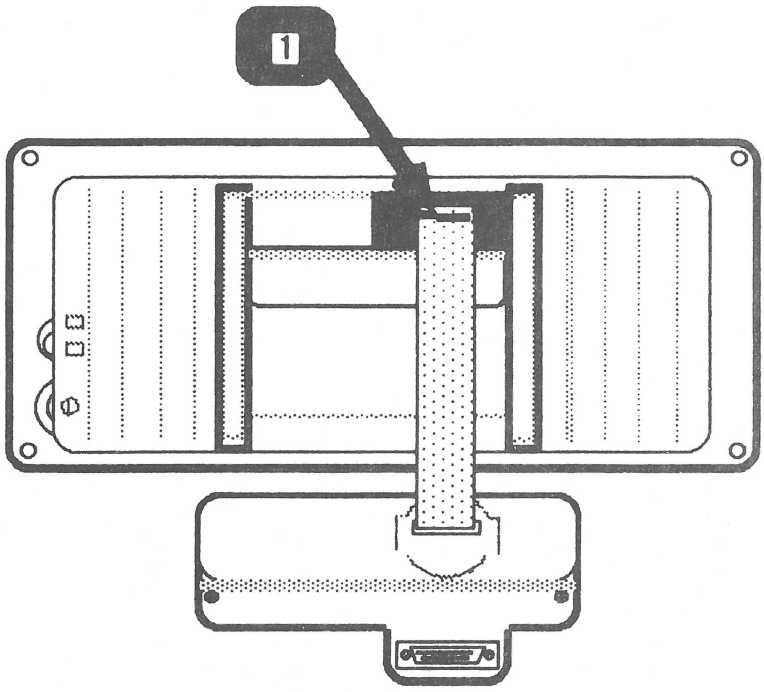

FIGURE 15

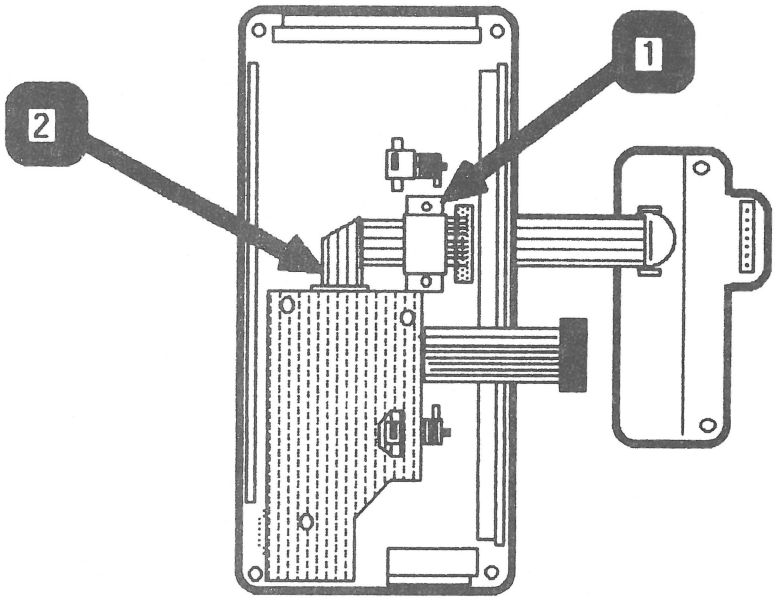

FIGURE 16

6. Orient the connector box and the back of the flat panel case as shown in Figure 15.

7. Slide the other end of the ribbon cable through the opening in the back of the flat panel case. Pull the cable through until the metal clamp on the insulation (white rubber coat) is just inside the opening in the case. (See Figure 15, #1.

   NOTE: The connector box should no more than 1/2 inch away from the flat panel.

8. Snap the plastic cable brace back into place on the back of the flat panel. (See Figure 10, #1.)

9. Flip the back side of the flat panel over and replace the metal cable clamp (Figure 16, #1).

10. Connect the ribbon cable to the contrast card as shown in Figure 16, #2.

11. Follow steps 4 through 8 of "**Installing the Liquid Crystal Display (LCD)**" to reconnect the LCD and close the flat panel display case.

Flat Panel Display Technical Procedures

Section 4

Illustrated Parts List

The figures and lists below include all piece parts that can be purchased separately from Apple for the Flat Panel Display, along with their part numbers. These are the only parts available from Apple. Refer to your Apple Service Programs manual for prices.

Contents:

Illustrated Parts List.....4.2

Drwg 070-0222-A | 1/1

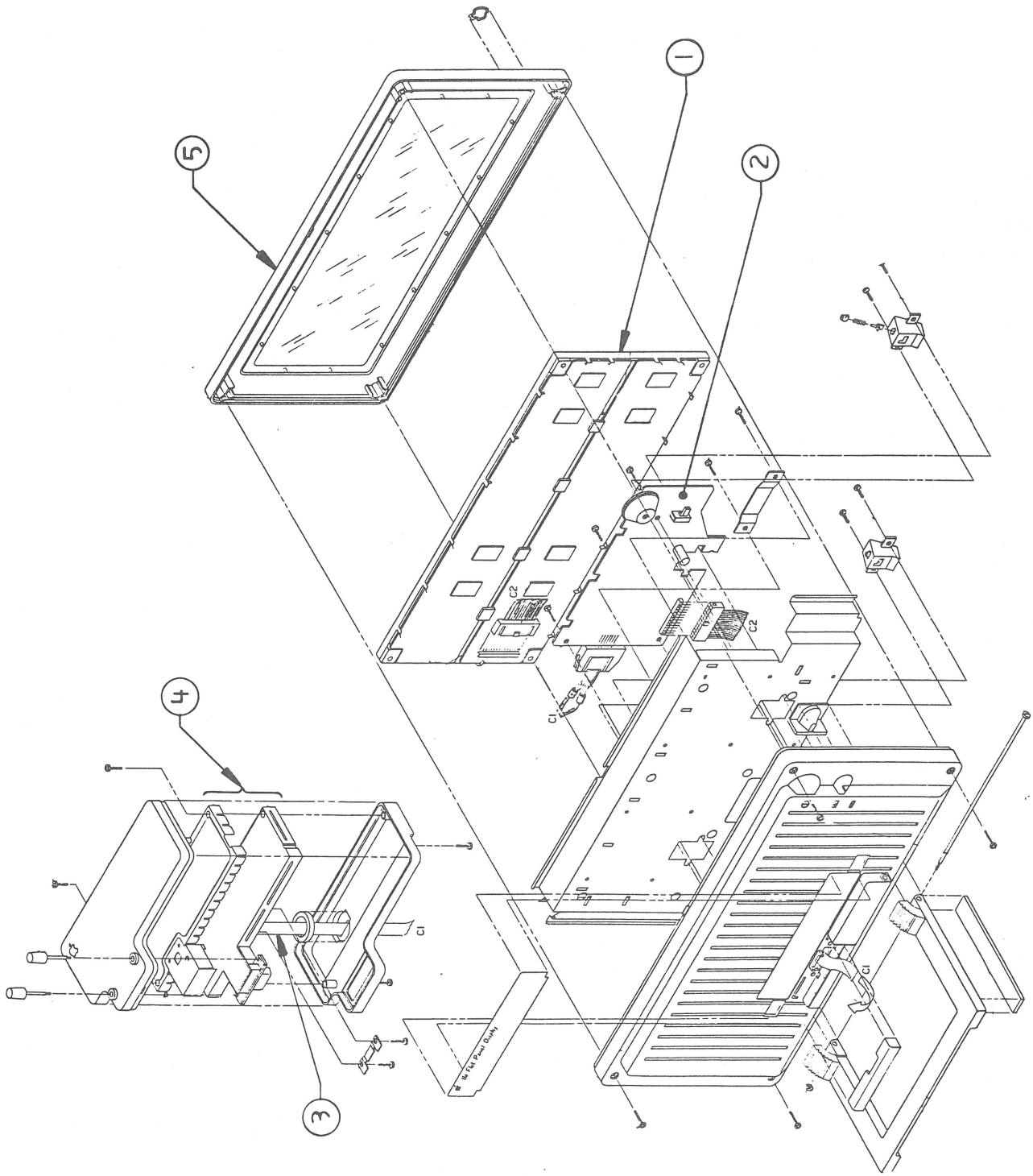

FLAT PANEL DISPLAY

Item	Part No.	Description
1	076-8128	Flat Panel Display, LCD
2	661-0281	Contrast Card, Flat Panel Display
3	936-0015	Cable, Assembly
4	661-0282	Connector Box, Flat Panel Display
5	815-0884	Case, Front FPD

APPLECOLOR MONITOR 100 TECHNICAL PROCEDURES

TABLE OF CONTENTS

Section 1 - Basics

Product Description.....1.2
Safety Precautions.....1.3
Disposing of the Cathode-Ray Tube (CRT).....1.7

Section 2 - Take-Apart

Removing the Rear Enclosure.....2.3
Replacing the Rear Enclosure.....2.3
Discharging the CRT.....2.5
Removing and Replacing Procedures:
- Logic Board.....2.7
- Power Supply (P/S) Board.....2.13
- Power Transformer.....2.14
- Tilt Motor.....2.17
- Front Bezel.....2.19
- CRT/Yoke Assembly.....2.21
- Mask.....2.25
- Brightness/Contrast Control Knobs.....2.27
- Brightness/Contrast Control.....2.27
- Green Only Switch.....2.29
- Power Button/Switch...(LED).....2.31
- Tilt Motor Button/Switch.....2.33
- Replace the Power Supply Fuse (F601).....2.35

©Apple Computer, Inc., 1984, 1986, 1987.
No part of this document may be reproduced in any form without the written permission of Apple Computer, Inc.

AppleColor is a trademark of Apple Computer, Inc.
Apple and the Apple logo are registered trademarks of Apple Computer, Inc.

Section 3 - Adjustments

Logic Board Adjustments.....3.3
Introduction.....3.3
Materials Needed.....3.3
Setup Procedure.....3.5
Evaluating the Video Test.....3.7
Vertical Adjustments.....3.9
Horizontal Adjustments.....3.9
Focus Adjustment.....3.9
Color Adjustments.....3.11
Color Bar Check.....3.11
White Balance.....3.11

Section 4 - Troubleshooting Guide

Introduction.....4.2
Symptoms.....4.2

Section 5 - Illustrated Parts List

AppleColor Monitor 100 Illustrated Parts.....5.3
Monitor Cables.....5.5

AppleColor Monitor 100 Technical Procedures

Section 1

Basics

Contents:

Product Description.....1.2
Safety Precautions.....1.3
Disposing of the Cathode-Ray Tube (CRT).....1.7

PRODUCT DESCRIPTION

The AppleColor Monitor 100 is an accessory product to be used with the Apple II family of computers and the Apple ///. Its design incorporates the following features:

1. 12-inch tilting screen.

2. High-quality, 80-column display.

3. Green Only switch for systems that output white text.

4. Nonglare, high-contrast screen surface.

5. Accurate reproduction of color graphics.

There are two versions of the AppleColor Monitor 100: Rev. 0 and Rev. A. There are very slight differences between the two versions. Technical procedures are the same for both, except as noted.

Frequently used controls are located behind a protective door at the right front of the monitor. Other controls are on the back. Internationally recognized symbols, shown in Figure 1, are used to identify the controls.

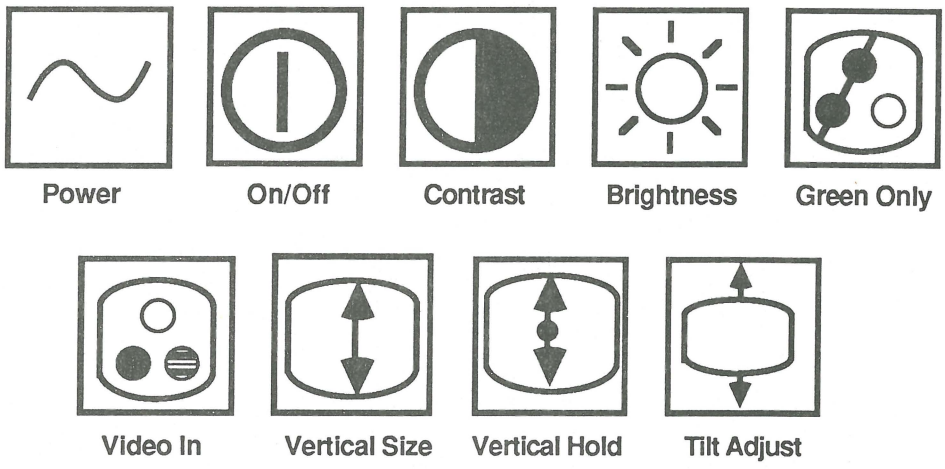

FIGURE 1

SAFETY PRECAUTIONS

The Applecolor Monitor 100 is harmless as long as you're just watching the display. Removing the cover, however, exposes you to the high-voltage Cathode-Ray Tube (CRT)--the picture tube. The following precautions must be taken to ensure your safety, especially when you are performing live adjustments on the monitor.

Safe Electrical Setup

1. **Be sure your outlet is correctly wired and properly grounded.**

   Polarity and ground testers are available from most electronics stores. Test all outlets in your service area before working on **any** electrical equipment. If you have any doubts about your building's wiring, consult a qualified electrician.

2. **Never use an adaptor plug to connect a monitor's three-prong power plug to a two-prong wall outlet.**

   Adaptors defeat the ground pin, which is a safety feature.

3. **Use an isolation transformer between the monitor and the outlet when performing live adjustments.**

   Order an isolation transformer from your electronics distributor, and make it a practice to use it whenever you are working with **any** charged monitor or other powered system under test. An isolation transformer isolates the circuitry of the system under test from the power company's circuitry, reducing the likelihood of a fatal shock should you simultaneously contact high voltage and anything else that is earth-grounded.

   Do not connect more equipment to the transformer than the wattage capacity of the transformer will bear. (It is usually best to connect only one piece of equipment at a time.) We recommend an isolation transformer with a minimum wattage capacity of 500 VA, with a grounded three-prong cord and receptacle. Two such transformers, available from many electronics stores and distributors, are listed below:

   Triad N-57MG Stancor GIS 500

CRT Safety Rules

1. **Do not work on a monitor alone.**

   In case of accident, it could save your life to have someone else nearby. Apple recommends that your staff be trained in Cardio-Pulmonary Resuscitation (CPR).

2. **Remove rings, watches, bracelets, hanging necklaces, and other jewelry before performing repairs on a monitor.**

   Metal jewelry is an excellent conductor of electricity. Removing jewelry will reduce the possibility of electric shock.

3. **Never use a grounding wriststrap or heelstrap or work on a grounded workbench mat when discharging a monitor or when performing live adjustments.**

   Grounding wriststraps, heelstraps, and mats are used to protect sensitive components from the damaging effects of electrostatic discharge from your own body or clothing. Even though they contain a one-megohm resistor and are designed to conduct only small electrical charges, we recommend that they be used **only** when working on "dead" (uncharged) equipment.

4. **Wear safety goggles when working with a CRT.**

   The CRT contains a high vacuum. If cracked or broken, it can implode (collapse into itself, then explode). To protect your eyes from serious injury, always wear safety goggles when working on or near a CRT, and be careful of other people in the area.

5. **Before working inside a monitor, turn off the power and disconnect the AC power cord.**

   Certain parts of a monitor chassis are hot (electrified) when the monitor is under power. Except when you must have the power on (for example, when making live adjustments), never work on a plugged-in monitor--even if you have the power turned off.

6. **Keep one hand in your pocket or behind your back when working on a live monitor.**

   This practice reduces the risk of current passing through your heart, should you accidentally contact high voltage.

7. **Always discharge the anode before touching anything inside the monitor.**

   The anode of the CRT maintains a charge of about 24,000 volts DC (even when the power is off). Before touching any internal components you must discharge this voltage. The anode can regain some charge, even after it has been discharged. If the service procedure takes more than 30 minutes, the anode should be discharged again.

8. **Never touch the anode connector or the anode aperture.**

   Normally the anode aperture (Figure 2, #1) has a connector plugged into it (Figure 3, #2). When a CRT is replaced, the anode connector is removed, exposing the anode. The anode can maintain a charge of several thousand volts (even after the power is off).

9. **Do not pick up or handle a CRT by its neck.**

   To prevent an implosion, you should take every precaution against breaking the tube. Be especially careful with the neck, the area where the tube is the thinnest.

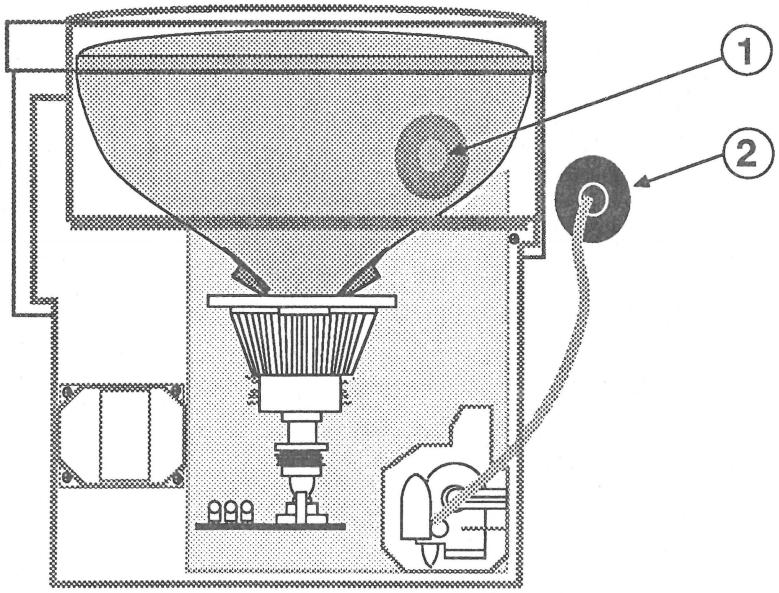

FIGURE 2

Live Adjustment Rules

In addition to the precautions listed on the previous pages, never touch the following components when adjusting a live AppleColor Monitor 100:

1. The yoke wires (Figure 3, #1)
2. The anode connector (Figure 3, #2)
3. The anode wire (Figure 3, #3)
4. The flyback transformer (Figure 3, #4)

WARNING: Serious injury could result if you touch any of these components with the power on.

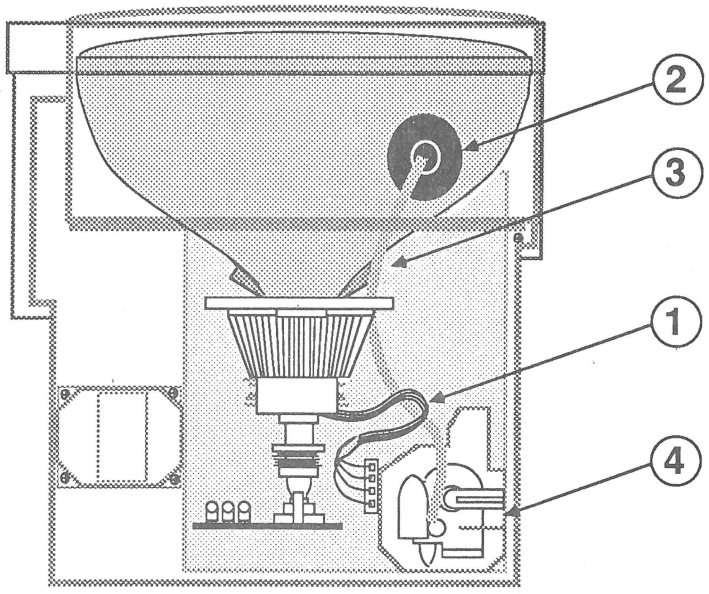

FIGURE 3

DISPOSING OF THE CATHODE-RAY TUBE (CRT)

WARNING: Remember that a CRT can implode unless it is devacuumed. Putting a defunct CRT into a trash receptacle without devacuuming it can endanger other people.

Materials Required

Thick cardboard box large enough to conceal the CRT
Large, sharp diagonal cutters
Large pliers
Duct tape
Safety goggles
Gardening gloves
12-inch square of cloth or heavy paper

Devacuuming the CRT

1. Put on the safety goggles.

2. In the side of the box about six inches from the bottom, cut or drill a hole just large enough to accommodate the very tip of the CRT.

3. Place the CRT inside the box with the tip of the neck protruding through the hole, and tape the box flaps down with duct tape (Figure 4).

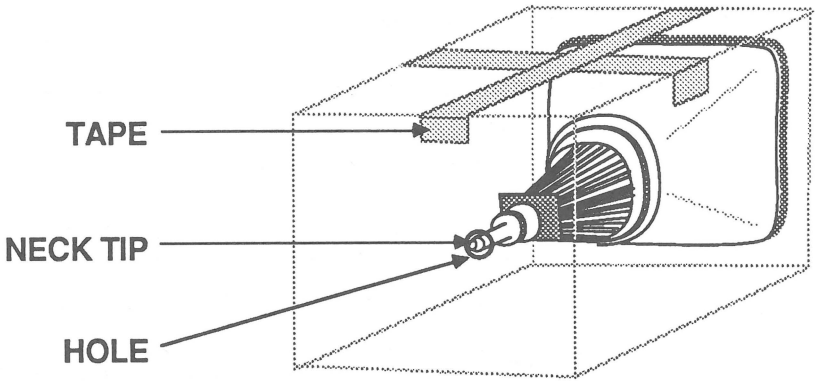

FIGURE 4

❑ DISPOSING OF THE CATHODE-RAY TUBE (CRT)

When replacing a defective CRT assembly from a color monitor, devacuum the defective color CRT (see "Devacuuming the CRT" below) and send it to Apple for proper disposal. If the CRT is cracked, however, do not return it to Apple; instead, make sure the cracked CRT is completely devacummed and dispose of it according to local hazardous-waste ordinances.

When returning a defective color CRT to Apple, use the original packaging. Refer to the "Product Notices" section of your *Service Programs* binder for special packaging requirements.

WARNING: *To properly dispose of a defective monochrome CRT, you must first devacuum the CRT before throwing it in a trash receptacle. Discarded CRTs that have not been devacuumed may crack and implode. To prevent serious injury, follow the procedure described in this section whenever discarding a CRT.*

Materials Required

Thick cardboard box large enough to conceal the CRT
Large, sharp diagonal cutters
Large pliers
Duct tape
Safety goggles
Gardening gloves
12-inch square of cloth or heavy paper

Devacuuming the CRT

1. Put on the safety goggles.

2. In the side of the box about six inches from the bottom, cut or drill a hole just large enough to accommodate the tip of the CRT.

3. Place the CRT inside the box with the tip of the neck protruding through the hole, and tape the box flaps down with duct tape (Figure 4).

WARNING: *Only the tip of the CRT neck should protrude through the hole in the box. The box must not have any other openings.*

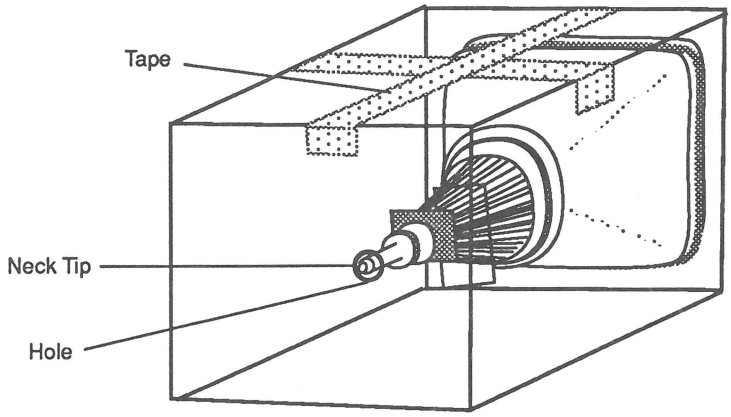

FIGURE 4

4. Put on the gloves.

5. Pull off the black plastic guide at the end of the CRT neck. Using the diagonal cutters, carefully clip the connector pins on the end of the CRT neck.

6. Tape the piece of cloth or paper onto the box (Figure 5, #1) so that the cloth or paper forms a veil over the opening (Figure 5, #2) but allows your hand access to the tip of the CRT. The veil's purpose is to catch the bits of glass that may fly during the following step.

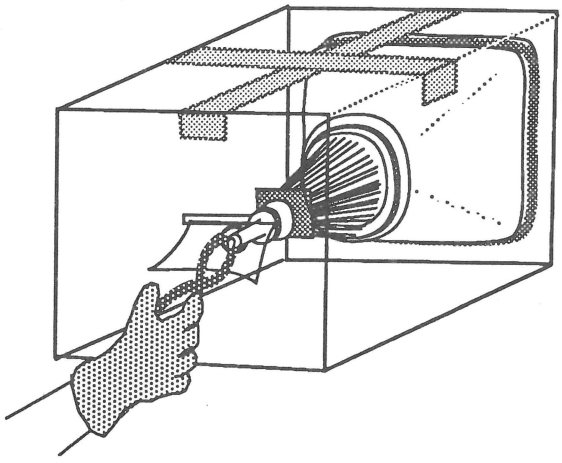

FIGURE 5

7. Make sure no one is nearby. Place the pliers under the veil, stand to one side, and look away. Use the pliers to snip off the exposed tip of the CRT (see Figure 5).

***WARNING:** Do not look directly at the box when cutting off the tip!*

You will probably hear a rush of air entering the CRT when the CRT vacuum breaks—but even if you don't, the procedure is complete if the tip of the CRT is clearly broken.

AppleColor Monitor 100 Technical Procedures

Section 2

Take-Apart

Contents:

Removing the Rear Enclosure.....2.3
Replacing the Rear Enclosure.....2.3
Discharging the CRT.....2.5
Removing and Replacing Procedures:
- Logic Board.....2.7
- Power Supply (P/S) Board.....2.13
- Power Transformer.....2.14
- Tilt Motor.....2.17
- Front Bezel.....2.19
- CRT/Yoke Assembly.....2.21
- Mask.....2.25
- Brightness/Contrast Control Knobs.....2.27
- Brightness/Contrast Control.....2.27
- Green Only Switch.....2.29
- Power Button/Switch...(LED).....2.31
- Tilt Motor Button/Switch.....2.33
- Replacing the Power Supply Fuse (F601).....2.35
- Control Panel Door.....(See **Section 5, Illustrated Parts**)
- Tilt Loading Spring....(See **Section 5, Illustrated Parts**)

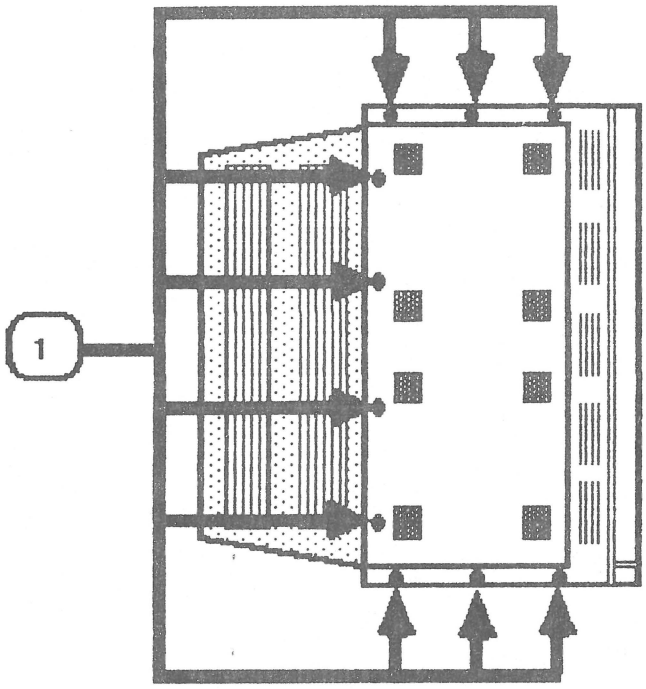

FIGURE 1

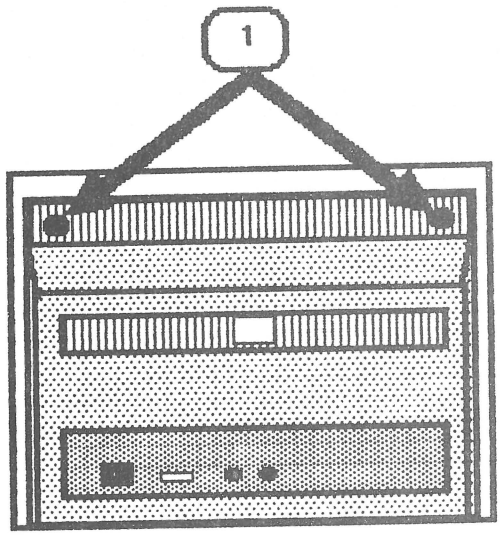

FIGURE 2

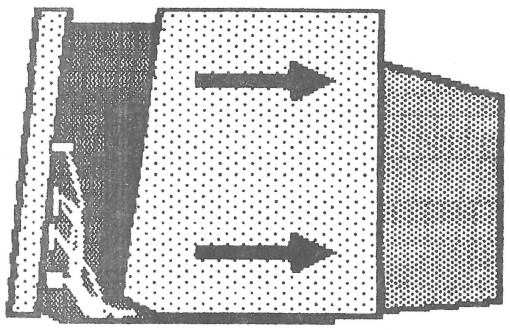

FIGURE 3

REMOVING THE REAR ENCLOSURE

1. Turn the monitor on and use the tilt switch to rotate the screen until it is facing as far down as possible. This will position the CRT neck away from the logic board for easy access to the logic board.

2. Turn the monitor off. Disconnect the AC power cord and the video cable from the back of the monitor.

3. Place the monitor on its right side and turn it so that the bottom is facing you.

4. Remove the ten screws shown in Figure 1, #1.

5. Carefully set the monitor back on its feet with the back facing you, as shown in Figure 2.

6. Remove the two screws shown in Figure 2, #1.

7. Slide the case straight back and away from the monitor (Figure 3). Set it aside.

REPLACING THE REAR ENCLOSURE

1. Turn the monitor so that the back is facing you.

2. Carefully slide the case forward onto the monitor chassis.

3. Tighten the two screws shown in Figure 2, #1.

4. Carefully set the monitor on its side with the bottom facing you and replace the ten screws shown in Figure 1, #1.

5. Set the monitor upright.

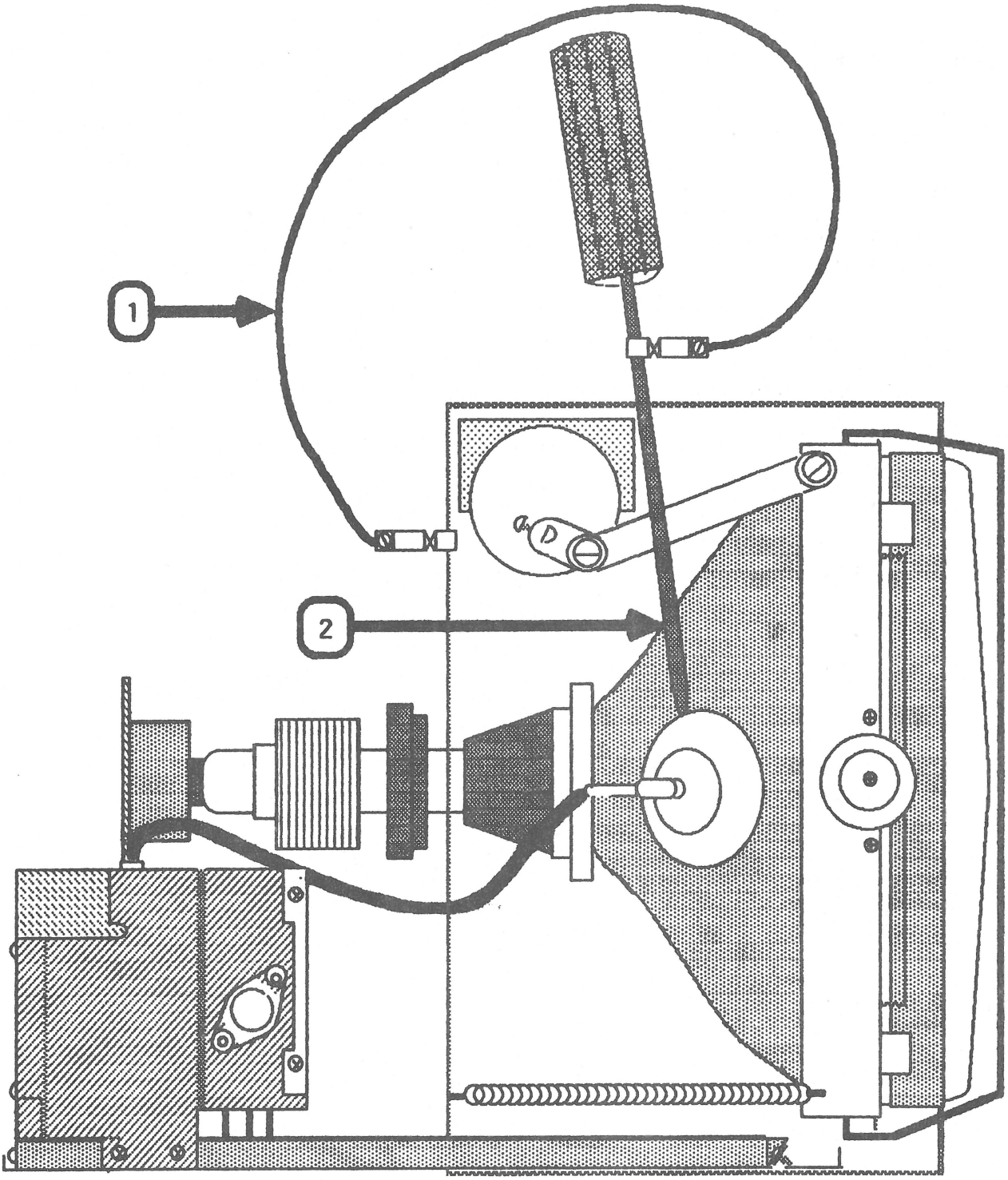

FIGURE 4

DISCHARGING THE CRT

1. Turn off the monitor.

2. Disconnect the AC power cord.

3. Remove the rear enclosure.

4. Position the monitor so that the back is facing you.

5. Remove any rings, wristwatches, bracelets, or grounding wriststraps.

6. Put on safety goggles.

7. Attach one end of an alligator lead to a long flatblade screwdriver, two inches from the insulated handle. Attach the other end to any part of the metal chassis surrounding the CRT. (Figure 4, #1).

   WARNING: USE ONLY ONE HAND WHILE DISCHARGING THE CRT. This is to eliminate any chance of your becoming a path for current should your hand slip and touch the metal part of the screwdriver. Grasp only the insulated handle of the screwdriver while discharging the CRT.

8. Slide the screwdriver under the CRT anode cap (Figure 4, #2) and push it towards the center of the cap until the blade comes into contact with the metal anode ring.

   CAUTION: DO NOT USE FORCE. If it is difficult to get the screwdriver under the anode cap, use a smaller screwdriver to loosen the suction of the anode cap on the tube. Then proceed to discharge the anode with the larger screwdriver.

9. Remove the screwdriver.

10. Remove the alligator clips.

11. Peel back the anode cap until you can see the anode ring at the center. Look at the metal connector in the center of the cap and notice how it is clipped into the CRT. Push on the cap in one direction and lift the cap off the tube.

NOTE: A secondary charge can build up even after you have discharged the CRT. To ensure that any residual charge is dissipated during the service procedure, establish a ground lead by fastening one alligator clip to the metal chassis and the other clip to the edge of the anode aperture.

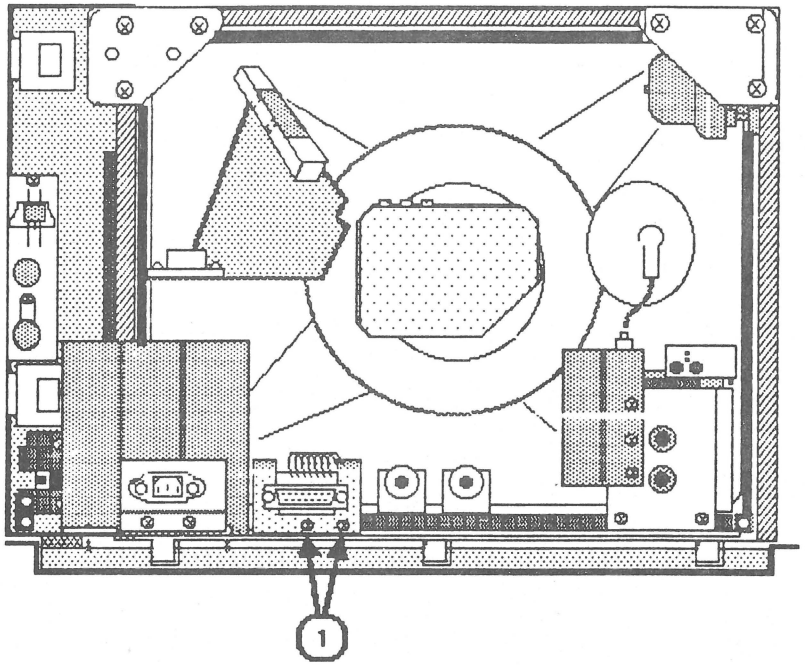

FIGURE 5

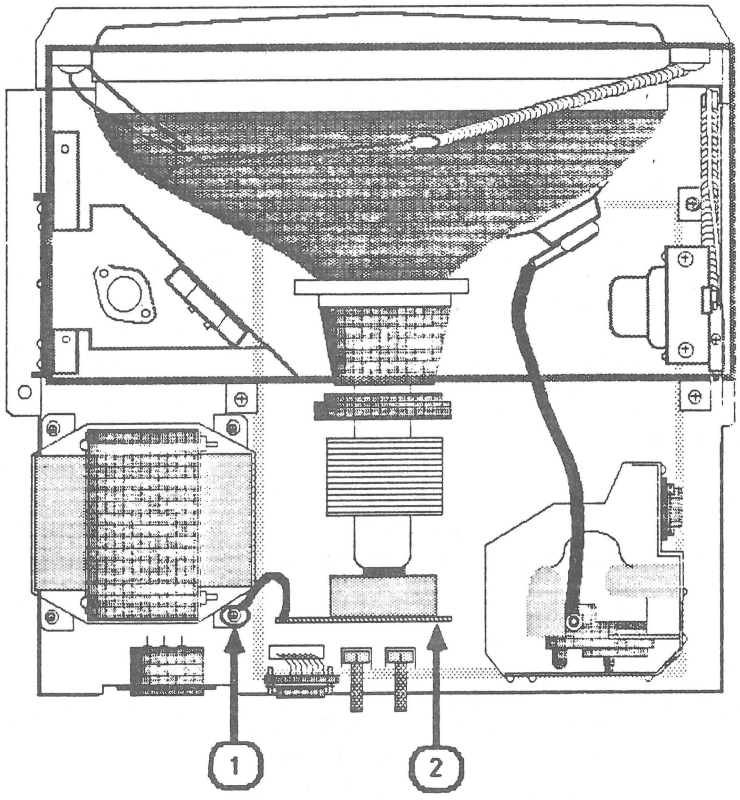

FIGURE 6

REMOVING AND REPLACING ... PROCEDURES:

Removing the Logic Board

NOTE: The CRT socket board, flyback transformer, and main logic board are all considered parts of one module since they cannot be separated from each other without desoldering components.

1. Disconnect the AC power cord.

2. Remove the rear enclosure.

3. Discharge the CRT. (See "Discharging the CRT" in this section.)

4. Remove the two Phillips screws (Figure 5, #1) which secure the metal bracket of the DB-15 connector to the chassis.

5. **DISCONNECT THE OTHER END OF THE DB-15 CABLE FROM THE LOGIC BOARD. DO NOT RETURN THIS CABLE AND ITS METAL BRACKET WITH THE DEFECTIVE LOGIC BOARD.** Keep the cable and bracket to install on the replacement logic board module. (You can order a new DB-15 cable, but you cannot order a bracket.)

6. Disconnect the ground strap by removing the power transformer screw shown in Figure 6, #1.

7. Carefully pull the CRT socket board (Figure 6, #2) away from the CRT neck until it barely clears the neck base. Hold the board so that it does not fall free, and tilt it so that the component side is facing up.

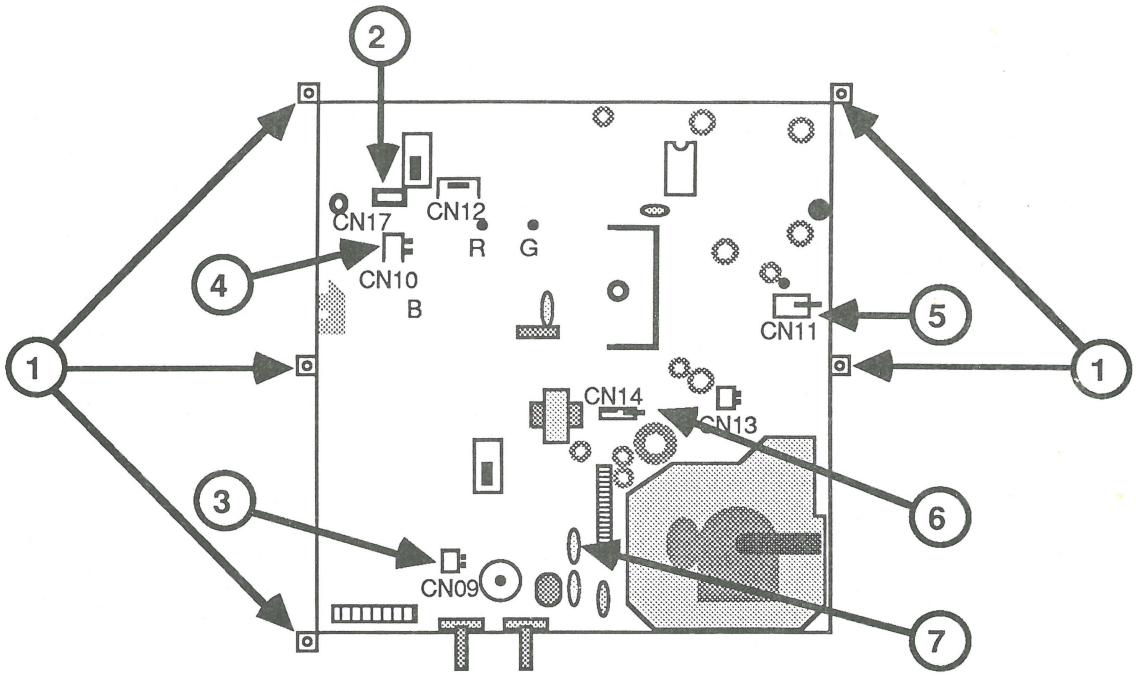

FIGURE 8

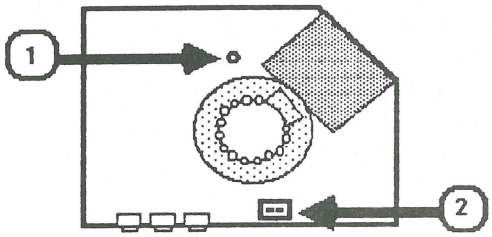

FIGURE 7

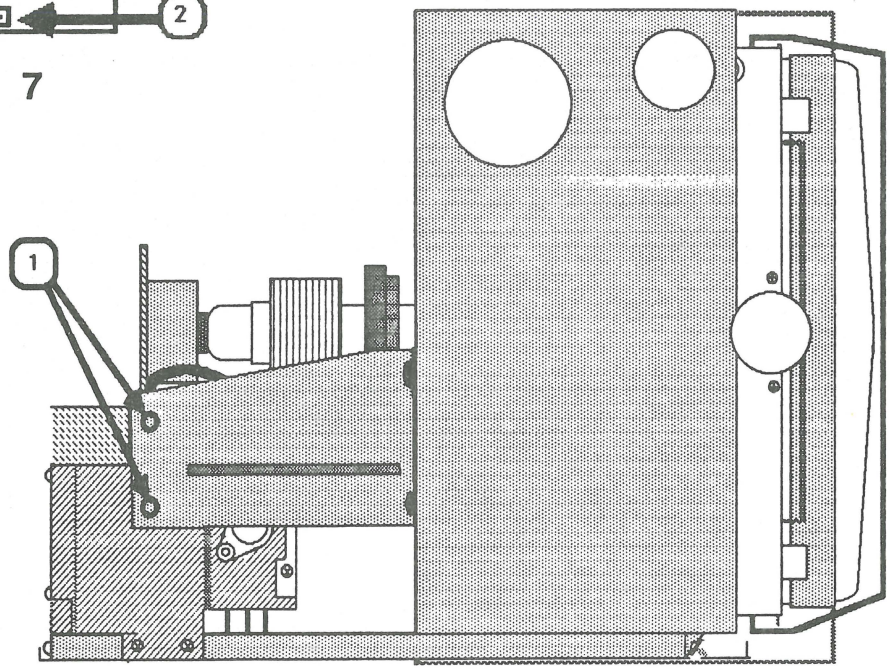

FIGURE 8A

Replacing the Logic Board

NOTE: If AND ONLY IF you are replacing the logic board of a Rev. 0 monitor with an adapted Rev. A board (identified in the packaging as a substitute assembly) follow the two steps below before continuing with the usual replacement procedure:

* Remove the two small nuts that hold the sheet metal piece to the old DB15 connector assembly (from the defective logic board). Bolt the new DB15 connector (included in the substitute service module) to the sheet metal piece.

* Remove and discard the old contrast control assembly by removing the two mounting screws (Figure 9, #2).

---

1. Slide the logic board halfway back into the chassis.

2. Connect to the logic board the connectors listed in step 11 of "Removing the Logic Board". **CAUTION: Be sure all the connector wires are placed under the CRT neck!**

3. Replace the CRT socket board. It fits only one way.

4. Position the ground strap over the power transformer screw hole and tighten the screw. (See Figure 6, #1.)

5. Replace the five Phillips mounting screws to secure the logic board to the chassis. For Rev. A monitors, also replace the two Phillips screws which secure the flyback transformer unit bracket to the chassis.

6. Connect the CRT socket board connectors listed in step 8 of "Removing the Logic Board". **CAUTION: Be sure the anode lead is not touching any other components or wires. This is to protect other components should the anode lead insulation wear off.**

7. Replace the anode cap. Replace the rear enclosure.†

† **NOTE:** If you removed the old DB15 connector and contrast control from a Rev. 0 monitor (note above), you must follow the replacement procedures below before closing the monitor:

* Replace the two screws that attach the DB15 connector's sheet metal piece to the logic board sheet metal frame (Figure 9, #1). Connect CN08 to the logic board.

* Attach the new contrast control assembly: connect CN09, CN11, and CN17 (Figure 9A) to the logic board and screw the new contrast control assembly in place (Figure 9, #2).

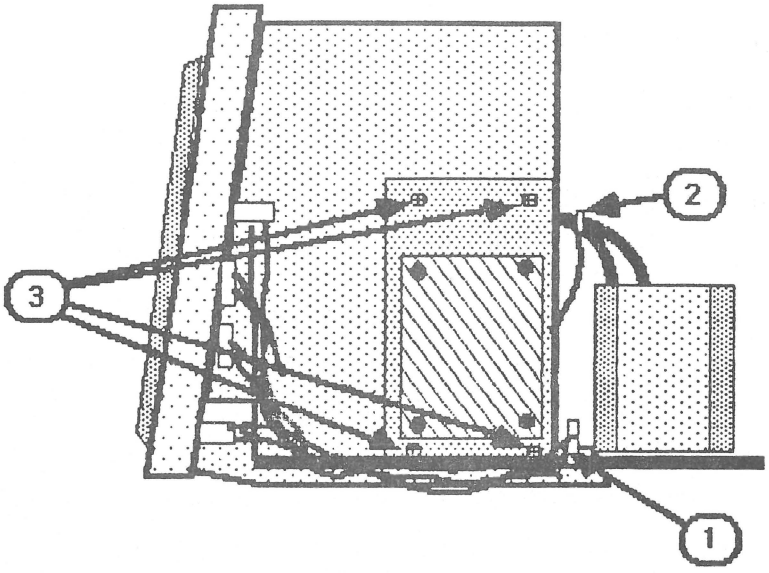

FIGURE 10

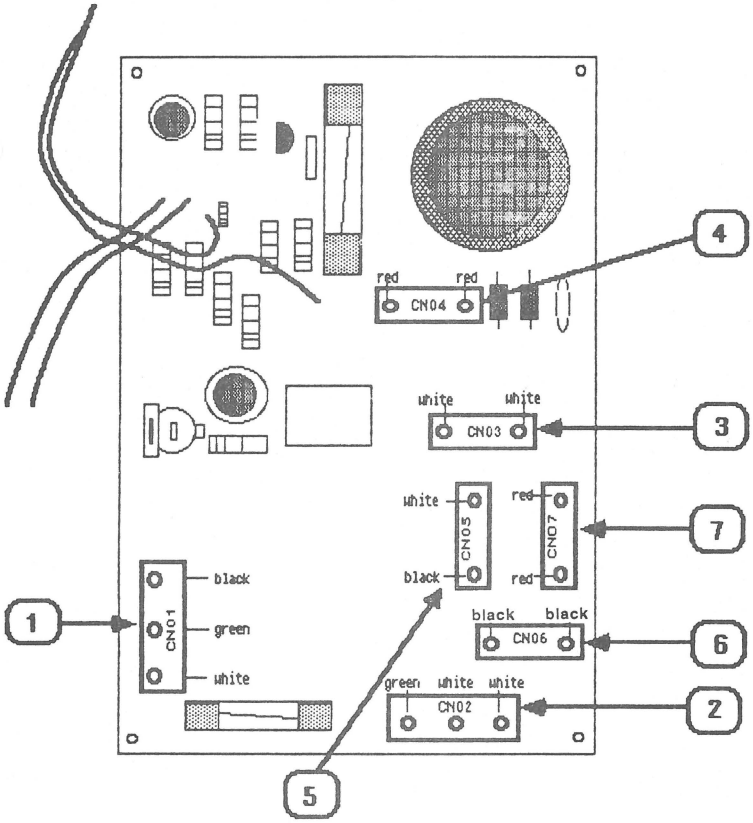

FIGURE 11

Removing the Power Supply (P/S) Board

1. Disconnect the AC power cord.

2. Remove the rear enclosure.

3. Follow steps 4 through 8 of "Discharging the CRT."

4. Disconnect CN14 from the logic board. (Figure 8, #6.)

5. Release the wires from the plastic cable clamp. (Figure 10, #1.)

6. Use a pair of diagonal cutters to cut the cable tie (Figure 10, #2) that holds the power supply wires together.

7. Remove the four Phillips screws from the P/S mounting plate (Figure 10, #3).

8. Tilt the plate slightly forward so that you can see where the connectors are on the component side (inside) of the P/S board (Figure 11).

   NOTE: The connectors are labeled on the solder side of the P/S board.

9. Disconnect the following connectors from the P/S board:

   CAUTION: Do not pull on the wires attached to the connectors when removing them. If any connectors are too hard to remove by hand, pry at the bottom of the connectors with a small screwdriver to loosen them before removing them. BUT BE CAREFUL: JIGGLING THE CONNECTORS TOO HARD WHEN REMOVING THEM MAY BREAK THE TRACES NEAR THE CONNECTOR POLES ON THE SOLDER SIDE OF THE BOARD.

   a) CN01 (black, green, and white) -- Figure 11, #1)

   b) CN02 (green, white, and white) -- Figure 11, #2)

   c) CN03 (white and white) -- Figure 11, #3)

   d) CN04 (red and red) -- Figure 11, #4)

   e) CN07 (red and red) -- Figure 11, #7)

   f) CN05 (white and black) -- Figure 11, #5)

   g) CN06 (black and black) -- Figure 11, #6)

10. Carefully remove the P/S board mounting plate.

Replacing the Power Supply (P/S) Board

NOTE: If you are installing a new power supply board, loosen the screw that mounts the white, rectangular heat sink resistor to the inside of the metal plate (see Diagram A, below). Position the resistor as shown in Diagram B, below and tighten the screw. The power supply board is now ready to be installed.

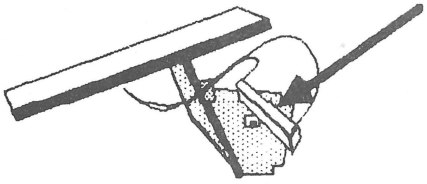

DIAGRAM A

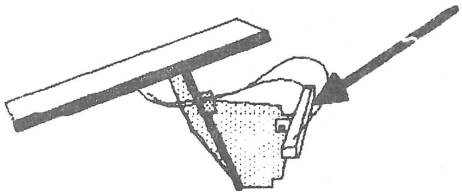

DIAGRAM B

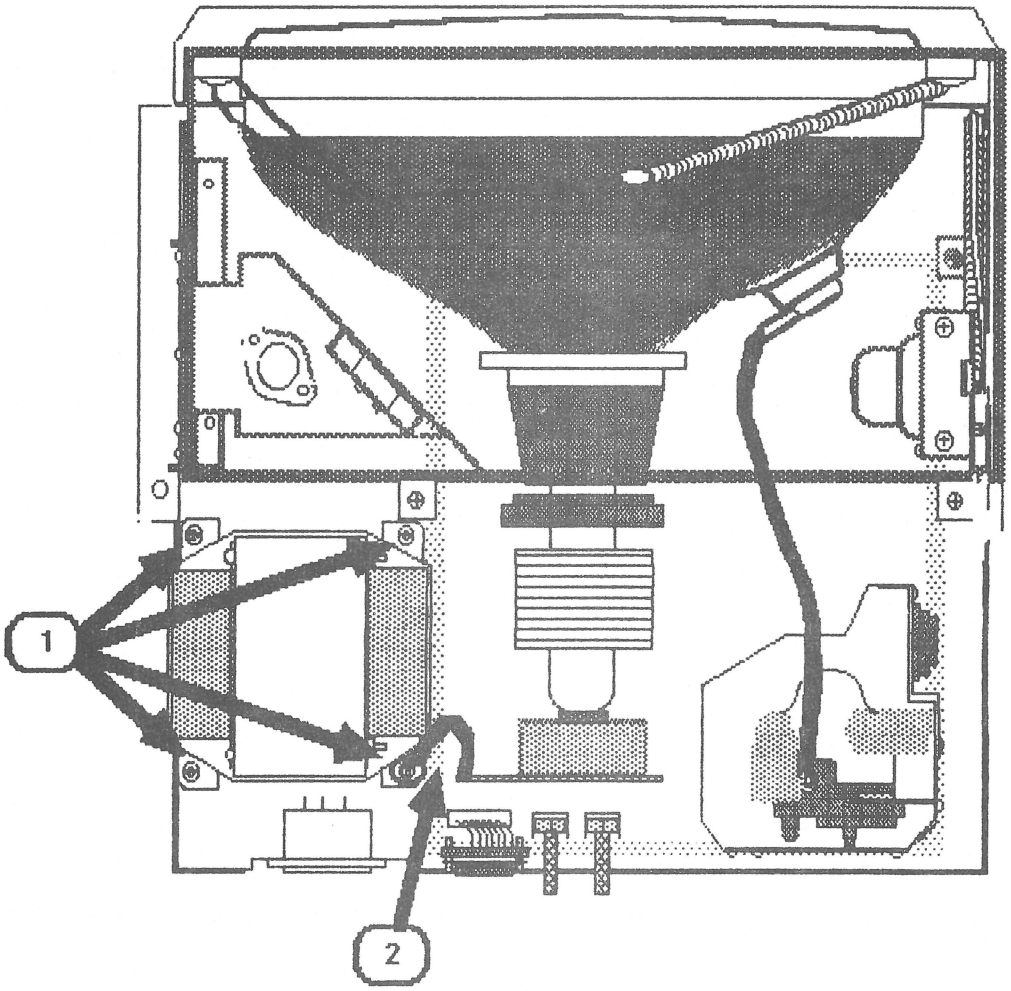

FIGURE 12

Replacing the Power Supply (P/S) Board (cont.)

1. Connect CN01 through CN07. **MAKE SURE THAT WIRE COLORS MATCH THE COLORS LISTED NEXT TO THE CONNECTORS AS SHOWN IN FIGURE 11** (see Figure 11, #1 - #7).

2. Connect CN14 to the logic board.

3. Replace the four P/S board mounting plate screws.

4. Set the wires back in the cable clamp from which they were removed (Figure 10, #1).

5. Replace the rear enclosure.

Removing the Power Transformer

1. Disconnect the AC power cord.

2. Remove the rear enclosure.

3. Follow steps 4 through 8 of **"Discharging the CRT."**

4. Remove the four power transformer mounting screws shown in Figure 12, #1.

5. Move the power transformer over so that you can easily reach the component side of the P/S board.

6. Disconnect CN04 and CN05 (Figure 11) from the component side of the power supply board.

7. Remove the power transformer.

Replacing the Power Transformer

1. Connect the CN04 and CN05 to the power supply board.

2. Place the transformer over its mounting holes with the wires closest to the P/S board. (Figure 12, #1.)

3. Position the ground strap over the proper screw hole (Figure 12, #2) and secure the ground strap by tightening the screw over the strap.

4. Replace the other three screws to secure the power transformer to the monitor chassis.

5. Replace the rear enclosure.

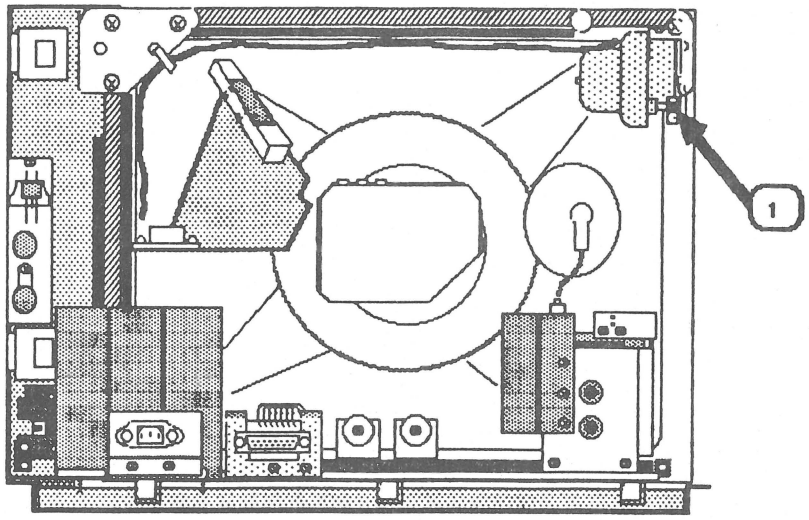

FIGURE 13

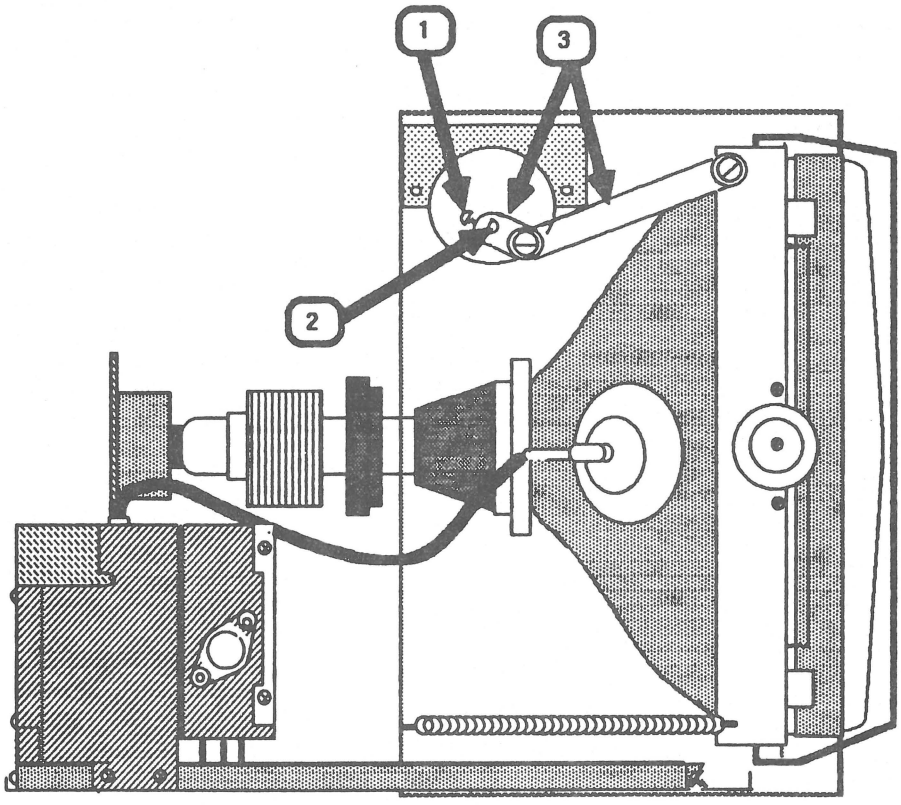

FIGURE 14

Removing the Front Bezel

1. Disconnect the AC power cord.

2. Remove the brightness/contrast control knobs.

3. Remove the rear enclosure.

4. Follow steps 4 through 8 of **"Discharging the CRT."**

5. Remove the brightness/contrast controls.

6. Remove the power button/switch.

7. Set the monitor on its feet. Figure 15 shows a top view of the monitor. Remove the three screws shown in Figure 15, #1.

8. Carefully place the monitor on its left side and remove the six screws shown in Figure 16, #1.

9. Place the monitor back on its feet.

10. Brace the front panel with one hand. Grasp the metal chassis by the top and lift it slightly off the table while you pull the front panel forward and away from the chassis.

Replacing the Front Bezel

1. Slide the front bezel back onto the metal chassis and replace the three screws at the top.

2. Mount the metal plate (brightness/contrast controls) back onto the front bezel.

3. Mount the plastic plate (On/Off - tilt) back onto the front bezel.

4. Place the monitor on its left side and replace the six mounting screws.

5. Replace the rear enclosure.

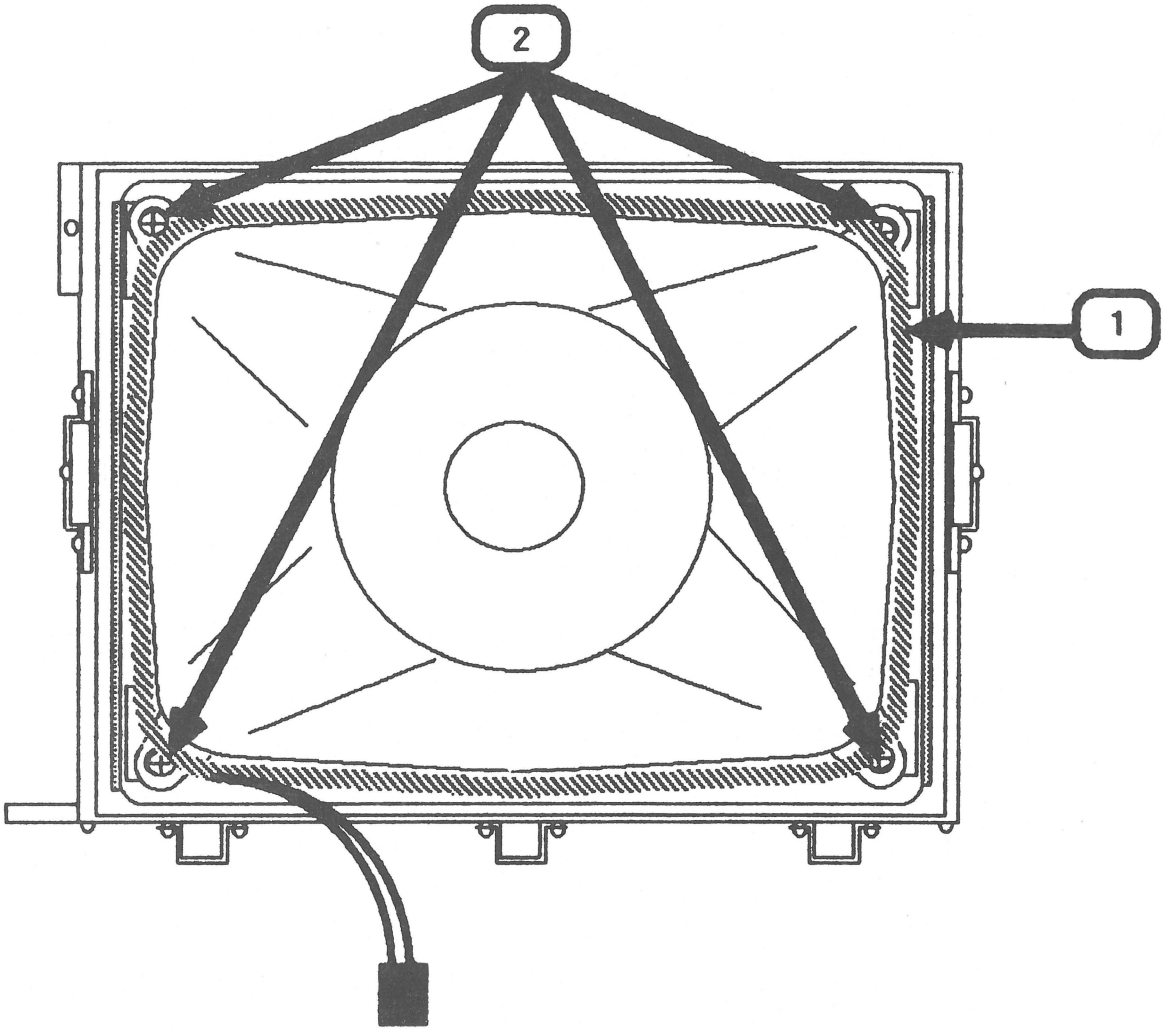

FIGURE 17

Removing the CRT/Yoke Assembly

1. Turn off the power and disconnect the AC power cord.
2. Remove the rear enclosure.
3. **Discharge the CRT.**
4. Place the monitor on a grounded workbench mat and put on your grounding wriststrap. (Never do this until after the monitor has been discharged.)
5. Remove the logic board.
6. Remove the power transformer.
7. Remove the power supply board.
8. Remove the tilt motor.
9. Remove the tilt loading spring.
10. Place the monitor face down on the grounded workbench mat.
11. Locate the degaussing coil (Figure 17, #1). It is braced to the CRT by plastic-coated holding tabs at each corner.

    NOTE: For clarity, Figure 17 shows the CRT and degaussing coil without the surrounding chassis frame, which is still in place in this step.
12. Using needlenose pliers, bend the plastic tabs out to free the degaussing coil.
13. Carefully lift out the degaussing coil and set it aside.
14. Use a long Phillips screwdriver or a 5/16 nut driver to remove the four CRT mounting screws (Figure 17, #2). Remove the large washers.
15. Supporting the CRT with one hand, set the monitor chassis upright and slide the CRT out of the chassis.
16. Place the CRT face down on a soft surface.

CONTINUED ON NEXT PAGE

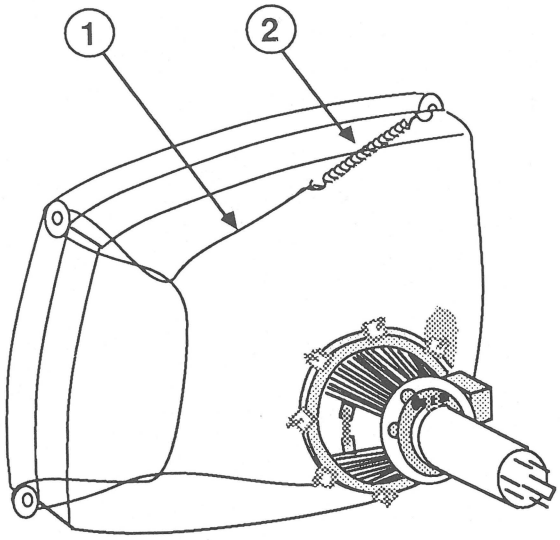

FIGURE 17A

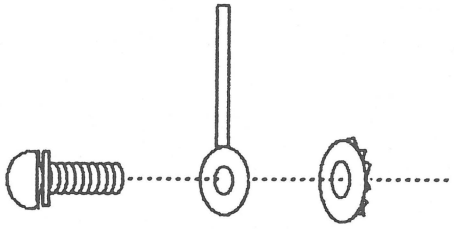

FIGURE 17B

17. Observe how the silver ground wire (Figure 17A, #1) is connected to the four corner mounting tabs of the CRT. Disconnect the spring (Figure 17A, #2) that secures the ground wire to the fourth corner mounting tab, and remove the ground wire from CRT. Save the ground wire and spring to install on the replacement CRT.

WARNING: If you intend to dispose of the CRT, refer to "Disposing of the Cathode-Ray Tube (CRT)" in **Section 1, Basics.**

Replacing the CRT/Yoke Assembly

1. Place the new CRT face down on a soft surface.

2. Loop the silver ground wire around the three corner mounting tabs and reconnect the spring to the fourth corner tab, as shown in Figure 17A.

3. Place the monitor chassis face down on the grounded workbench mat.

4. Carefully set the CRT inside the chassis with the anode on the right side as you face the rear of the CRT.

5. Place the plastic holding tabs on the CRT mounting screws. Place the large washers under the plastic tabs (see Figure 17B).

6. Hold the plastic tabs in place as you tighten the CRT mounting screws.

7. Orient the degaussing coil around the CRT so that the connector is at the bottom. Make sure the coil is as close to the front of the CRT as possible.

8. Bend the plastic holding tab stems around the corners of the degaussing coil to secure the coil to the CRT.

9. Replace the tilt loading spring.

10. Replace the power supply board.

11. Replace the tilt motor.

12. Replace the logic board.

13. Replace the power transformer.

14. Replace the rear enclosure.

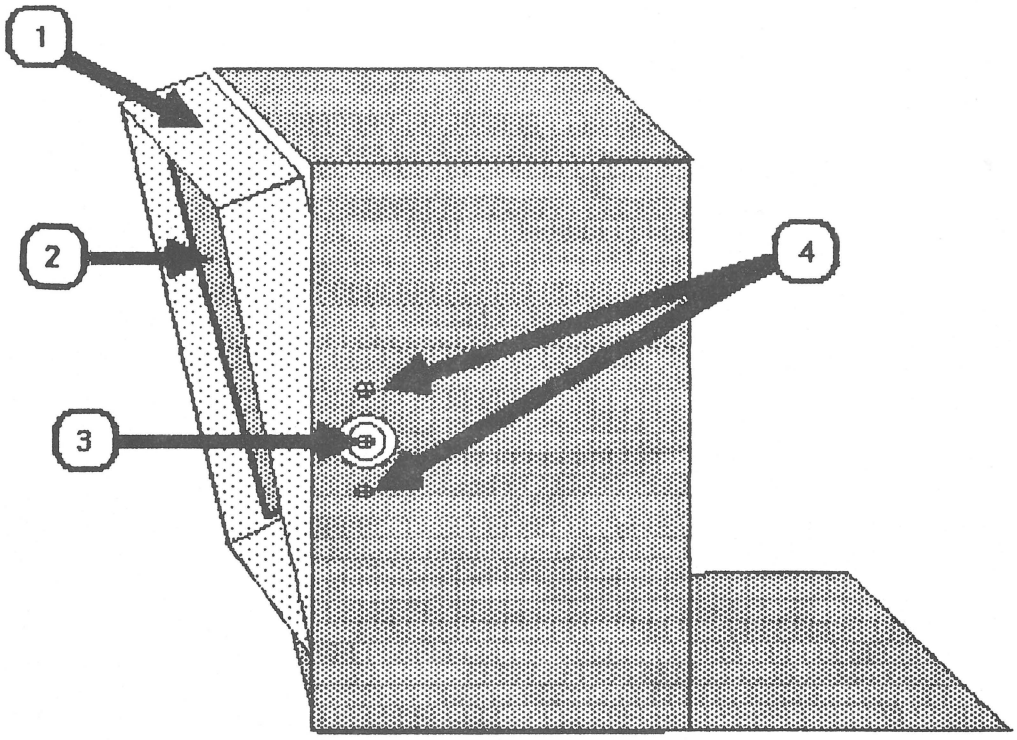

FIGURE 18

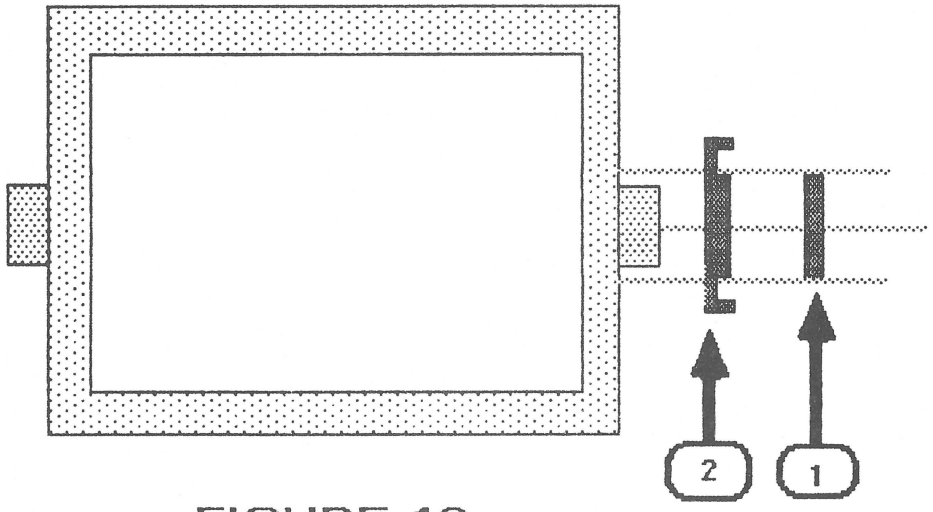

FIGURE 19

Removing the Mask

1. Disconnect the AC power cord.

2. Remove the rear enclosure.

3. Discharge and remove the CRT.

   NOTE: The mask is shown in Figure 18, #1. The metal parts that come off when removing the mask are not considered part of the mask.

4. Follow the instructions below for one side of the mask, and then the other.

   a) Support the CRT bracket (Figure 18, #2) while you loosen the axle screw (Figure 18, #3) until it clears the bracket. Set the bracket aside.

   b) Completely remove the axle screw (Figure 18, #3).

   c) Remove the two screws shown in Figure 18, #4.

5. Pull the mask forward and out of the monitor chassis.

6. Remove the metal ring (Figure 19, #1) and bracket (Figure 19, #2) from the mask axles on both sides of the mask.

Replacing the Mask

1. Place the metal brackets (Figure 19, #2) and rings (Figure 19, #1) back onto both mask axles.

2. Hold the brackets and rings in place as you slide the mask back into the chassis.

3. Follow these instructions for both sides of the mask:

   a) Replace the two screws shown in Figure 18, #4.

   b) Place the CRT bracket (Figure 18, #2) inside the mask with the screw holes adjacent to the screw holes located at the upper and lower corners of the mask.

   c) Replace the axle screw (Figure 18, #3).

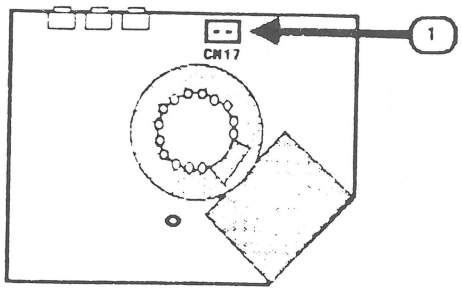

FIGURE 20

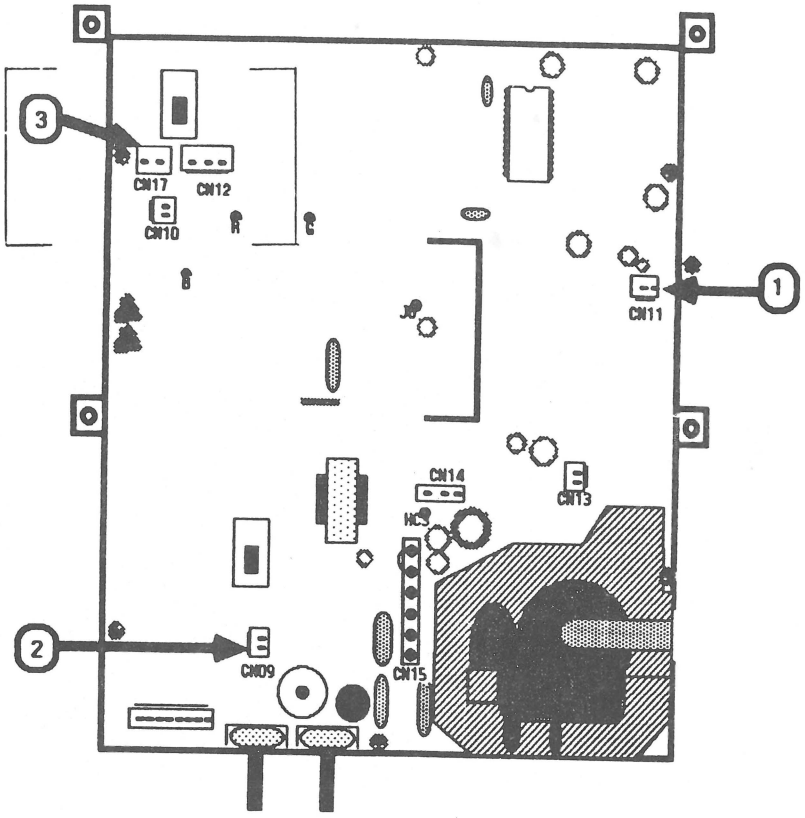

FIGURE 21

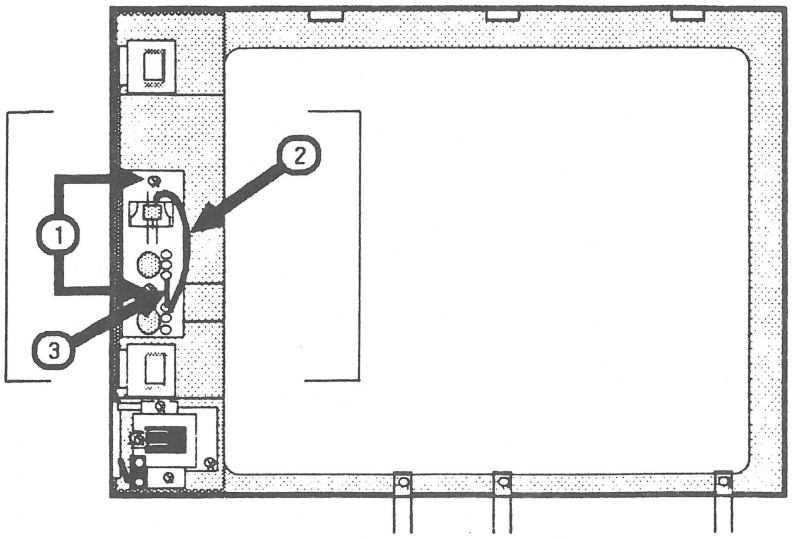

FIGURE 22

Removing and Replacing the Brightness and Contrast Control Knobs

1. Insert a flatblade screwdriver under the knob and gently pry until it is loose enough to pull off by hand.

2. To replace the knob, line up the inside of the knob with the shaft that it fits onto and slide it all the way onto the shaft.

Removing the Brightness/Contrast Control

1. Disconnect the AC cord.

2. Remove the brightness and contrast knobs.

3. Remove the rear enclosure.

4. Follow steps 4 through 8 of **"Discharging the CRT."**

5. As you face the back of the monitor you will see two potentiometers (brightness and contrast) and one slide switch (green only) attached to a metal plate located on the left side of the monitor. Use a pair of diagonal cutters to cut any cable ties binding the wires of those three components together.

6. Disconnect the following the connectors:

   a) CN17 (CRT socket board) -- Figure 20, #1
   NOTE: On the AppleColor Monitor 100 Rev. A, CN17 is located on the logic board (Figure 21, #3).

   b) CN11 (logic board) -- Figure 21, #1

   c) CN09 (logic board) -- Figure 21, #2

7. Carefully bring the wires outside of the chassis.

8. Remove the two screws (Figure 22, #1) that mount the metal plate to the front bezel and remove the plate.

9. If you are removing the brightness control from an AppleColor Monitor 100 Rev. 0, locate the wire (Figure 22, #2) that connects the brightness pot to the slide switch. Desolder and remove the wire from the brightness pot contact. If you are removing the contrast control, skip to step 11.

NOTE: The wire is not present on the AppleColor Monitor 100 Rev. A. Instead, there is a resistor connecting the brightness pot to the contrast pot (Figure 22, #3). If you are removing the brightness control, desolder the end of the resistor attached to the brightness pot. If you are removing the contrast control, desolder and remove the end of the resistor attached to the contrast pot.

11. Turn the plate around and remove the mounting nut and the potentiometer.

Replacing the Brightness/Contrast Control

1. Slide the pot shaft back through its fit-through on the mounting plate.

2. Orient the pot with the contacts facing in the same direction as they are on the brightness/contrast pot and replace the mounting nut.

3. If you are replacing the brightness control, solder the wire that was previously removed to the single contact. (On the AppleColor Monitor 100 Rev. A, resolder the resistor wire to the pot from which it was disconnected).

4. Mount the plate back onto the front bezel.

5. Tie the wires together with new cable ties if you have them. Also, tie the three sets of wires to the wires extending from the On/Off switch.

6. Route the wires back through the cable clamp located just in front of the power transformer.

7. Connect the following connectors:

   a) CN17 (CRT socket board) -- Figure 20, #1
      (On the AppleColor Monitor 100 Rev. A, CN17 connects to the logic board -- Figure 21, #3).

   b) CN11 (logic board) -- Figure 21, #1

   c) CN09 (logic board) -- Figure 21, #2

8. Replace the rear enclosure.

9. Replace the knobs.

Removing the Green Only Switch

1. Follow Steps 1 through 7 of "**Removing the Brightness/Contrast Control.**"

2. If you are working on an AppleColor Monitor 100 Rev. 0, desolder and remove the wire connecting the green only switch to the brightness pot. (On the AppleColor Monitor 100 Rev. A, there is no wire on the green only switch).

3. Remove the two Phillips screws that attach the button to the metal plate. They are located at either side of the switch.

Replacing the Green Only Switch

1. Place the switch back into its fit-through on the mounting plate. The soldered contacts should be at the top.

2. Replace the two mounting screws.

3. Slide the green button back onto its shaft.

4. Solder the wire previously removed back onto outermost switch contact. **(For AppleColor Monitor 100 Rev. A, skip this step -- there is no wire.)**

5. Follow steps 4 through 9 of "**Replacing the Brightness/Contrast Control.**"

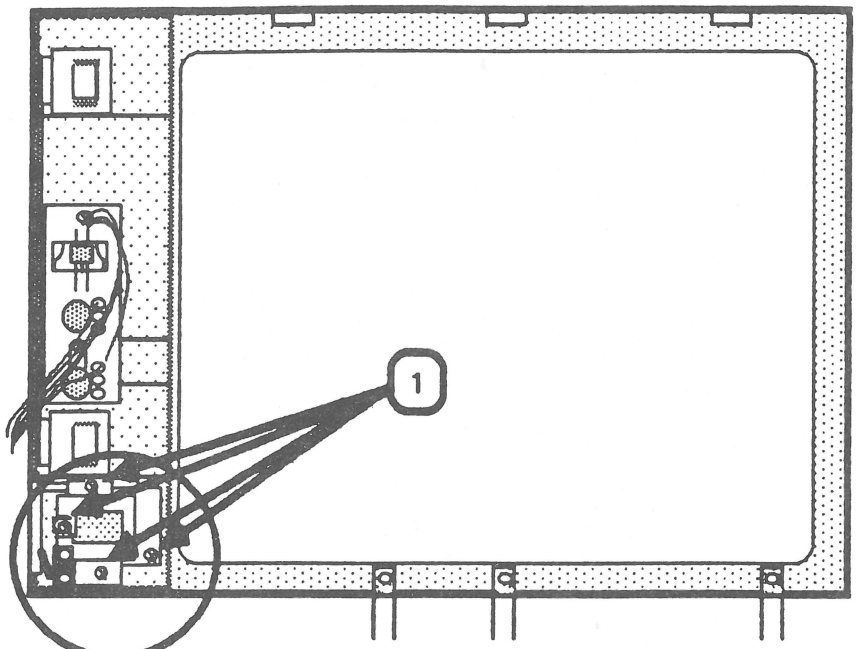

FIGURE 23

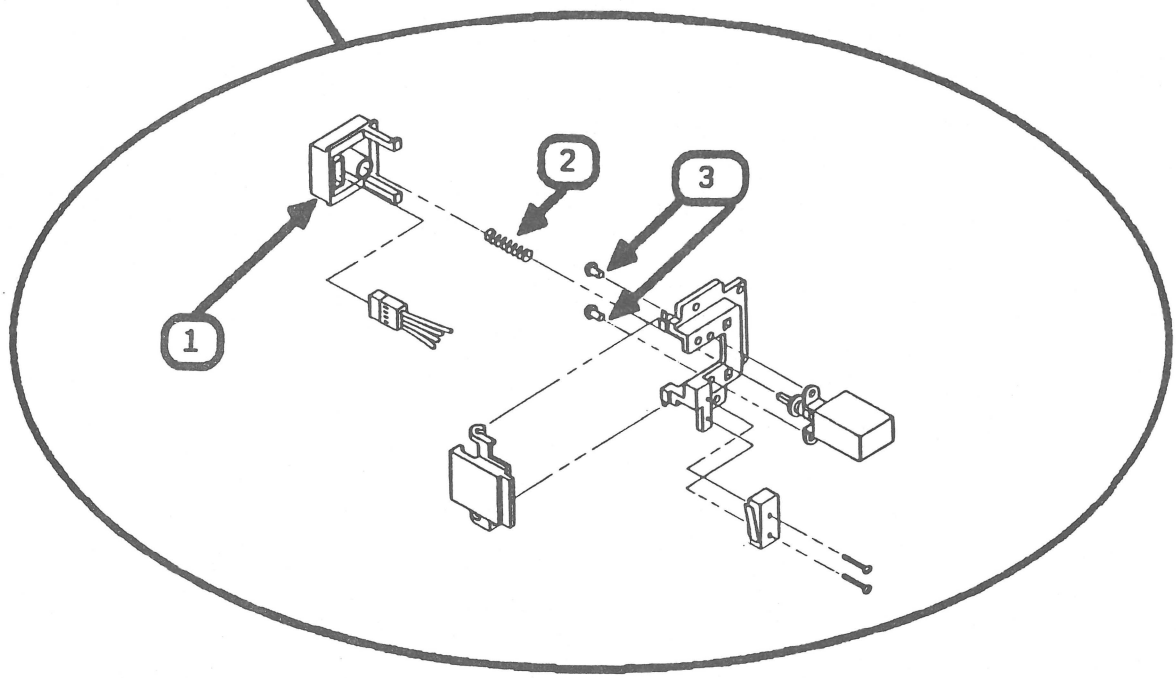

FIGURE 24

Removing the Power Button/Switch

1. Disconnect the AC power cord.

2. Remove the rear enclosure.

3. Follow steps 4 through 8 of **"Discharging the CRT."**

4. Locate the plastic mounting plate circled in Figure 23. Remove the four Phillips screws (Figure 23, #1).

5. The power button (Figure 24, #1) is attached to the plastic mounting plate by two legs at the top of the button. To release the button, push the two legs inward as you pull the button away from the mounting plate.

   NOTE: If you are removing the power switch, go to Step 7.

6. Locate the tiny PC board on the inside of the power button. This is the LED. It is attached to the button by two small Phillips screws. Remove the screws to separate the PC board from the power button.

7. Remove the small spring (Figure 24, #2) located on the power switch shaft.

8. Remove two Phillips switch mounting screws (Figure 24, #3) located at either side of the power switch shaft.

9. Follow the power switch wires back to their connector (CN02) on the component side of the power supply board. Disconnect CN02 and completely remove the switch.

   NOTE: If CN02 is too difficult to remove, follow steps 6 and 7 of "Removing the Power Supply Board" for easier access to the connector.

Replacing the Power Button/Switch

1. Orient the plastic mounting plate as it is shown in Figure 24.

2. Insert the switch into the plastic mounting plate with the wires on the right.

3. Place the spring back on the shaft of the switch (Figure 24, #2.) and replace the switch mounting screws.

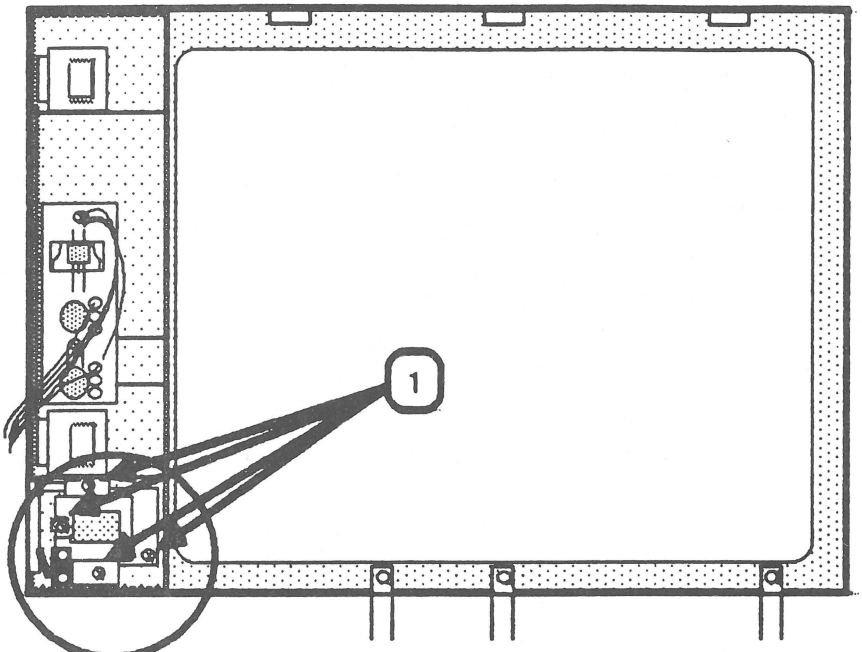

FIGURE 25

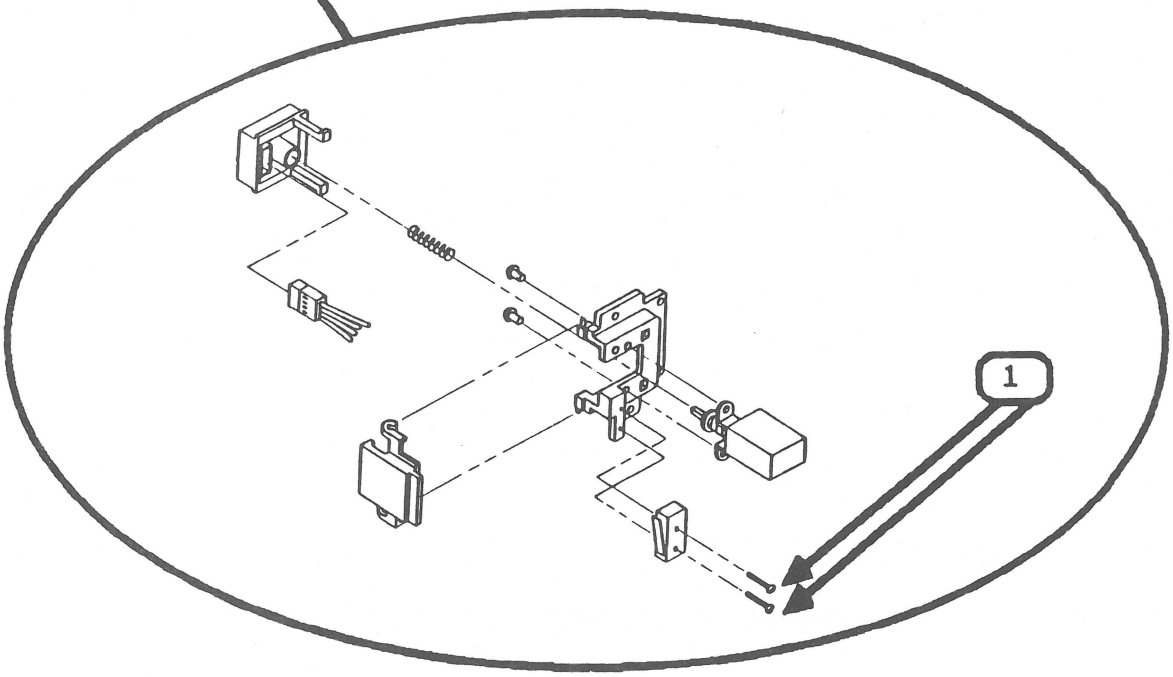

FIGURE 26

4. Hold the spring in place while you insert the power button legs back through the fit-throughs in the plastic plate. The spring fits into the hole in the back of the switch.

Removing the Tilt Motor Button/Switch

1. Disconnect the AC power cord.

2. Remove the rear enclosure.

3. Follow steps 4 through 8 of **"Discharging the CRT."**

4. Locate the plastic mounting plate circled in Figure 25. Remove the four mounting screws (Figure 25, #1).

5. Remove the two screws (Figure 26, #1) that secure the switch to the plastic plate.

6. Follow the tilt switch wires to where they connect to the power supply board by connector CN07. Disconnect CN07 from the power supply board.

   NOTE: If CN07 is too difficult to remove, follow steps 6 and 7 of "Removing the Power Supply Board" for easier access to CN07. Then continue with the next step.

7. Pull the tilt button back and away from the plastic plate until it snaps off.

Replacing the Tilt Motor Button/Switch

1. Snap the tilt button back on to its hinges.

2. Replace the two mounting screws that secure the switch to the plastic plate.

3. Connect the switch connector (CN07) to the power supply board.

4. Replace the four mounting screws to secure the plastic plate to the front bezel.

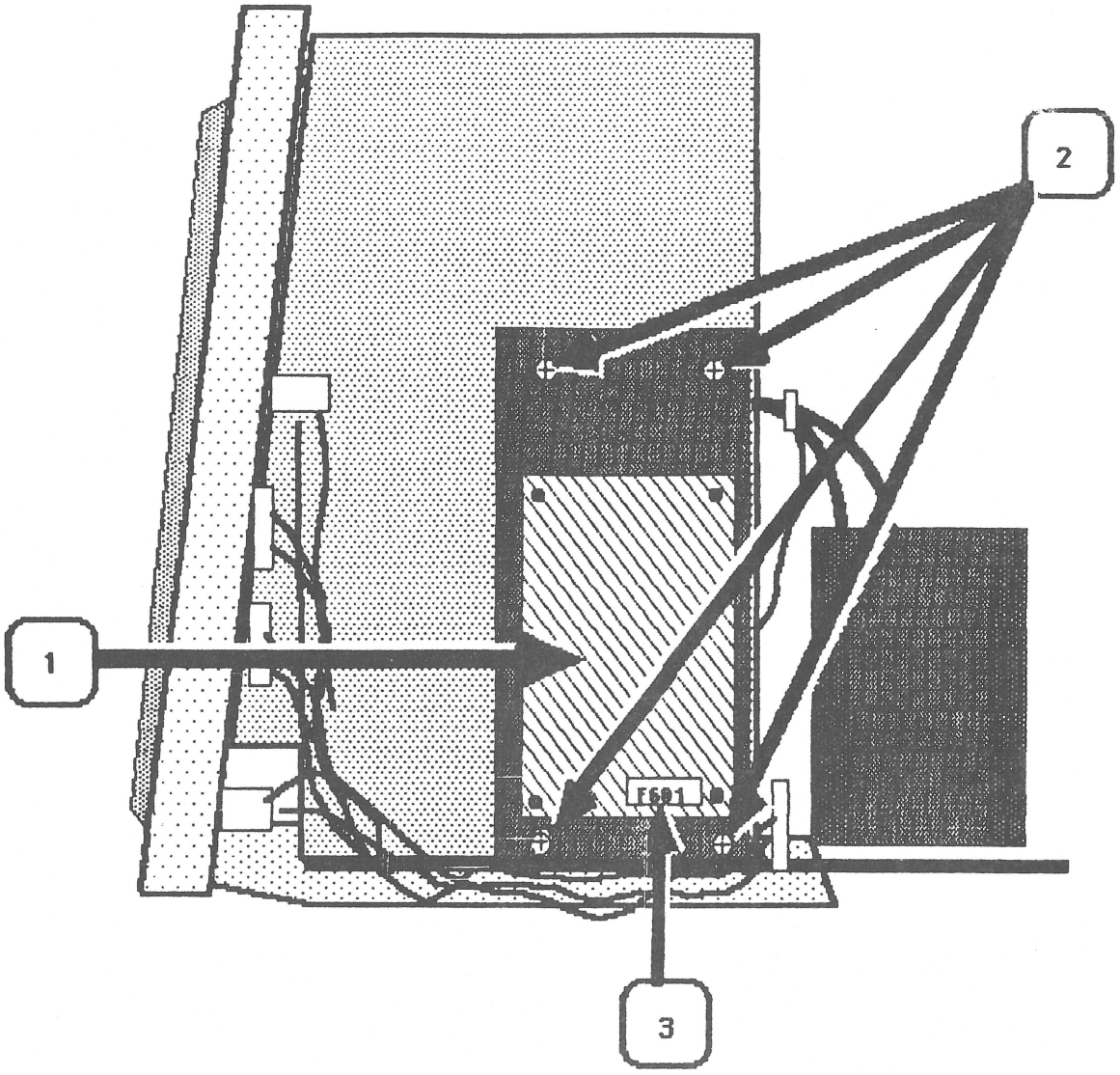

FIGURE 27

Replacing the Power Supply Fuse (F601)

The power supply fuse (F601) is mounted on the component side (inside) of the power supply board (Figure 27, #1). You do not have to remove the board completely in order to replace the fuse. The following procedures tell how to replace the power supply fuse (F601).

NOTE: Fuse F601 should be replaced with a 250V 2A Slow Blow fuse whenever you service a color monitor with a serial number below 025769.

1. Disconnect the AC power cord.

2. Remove the rear enclosure.

3. Follow steps 4 through 8 of **"Discharging the CRT."**

4. Remove the four screws (Figure 27, #2) from the power supply mounting plate.

5. Pull the bottom of the mounting plate up and over the wires leading to the control panel to gain access to the fuse.

   Figure 27, #3 shows the location of the fuse (F601) from the solder side (outside) of the power supply board.

6. Pry the fuse out of the fuse holder (away from the board).

   CAUTION: DO NOT TRY TO SLIDE THE FUSE SIDEWAYS. YOU MAY BREAK THE FUSE HOLDER.

7. Snap in the 250V 2A Slow Blow Fuse.

8. Reposition the power supply mounting plate flush against the chassis.

9. Replace the four mounting screws.

10. Replace the rear enclosure.

AppleColor Monitor 100 Technical Procedures

Section 3

Adjustments

Contents:

Logic Board Adjustments.....3.3
  Introduction.....3.3
  Materials Needed.....3.3
  Set Up Procedure.....3.5
  Evaluating the Video Test.....3.7
  Vertical Adjustments.....3.9
  Horizontal Adjustments.....3.9
  Focus Adjustment.....3.9

Color Adjustments.....3.11
  Color Bar Check.....3.11
  White Balance.....3.11

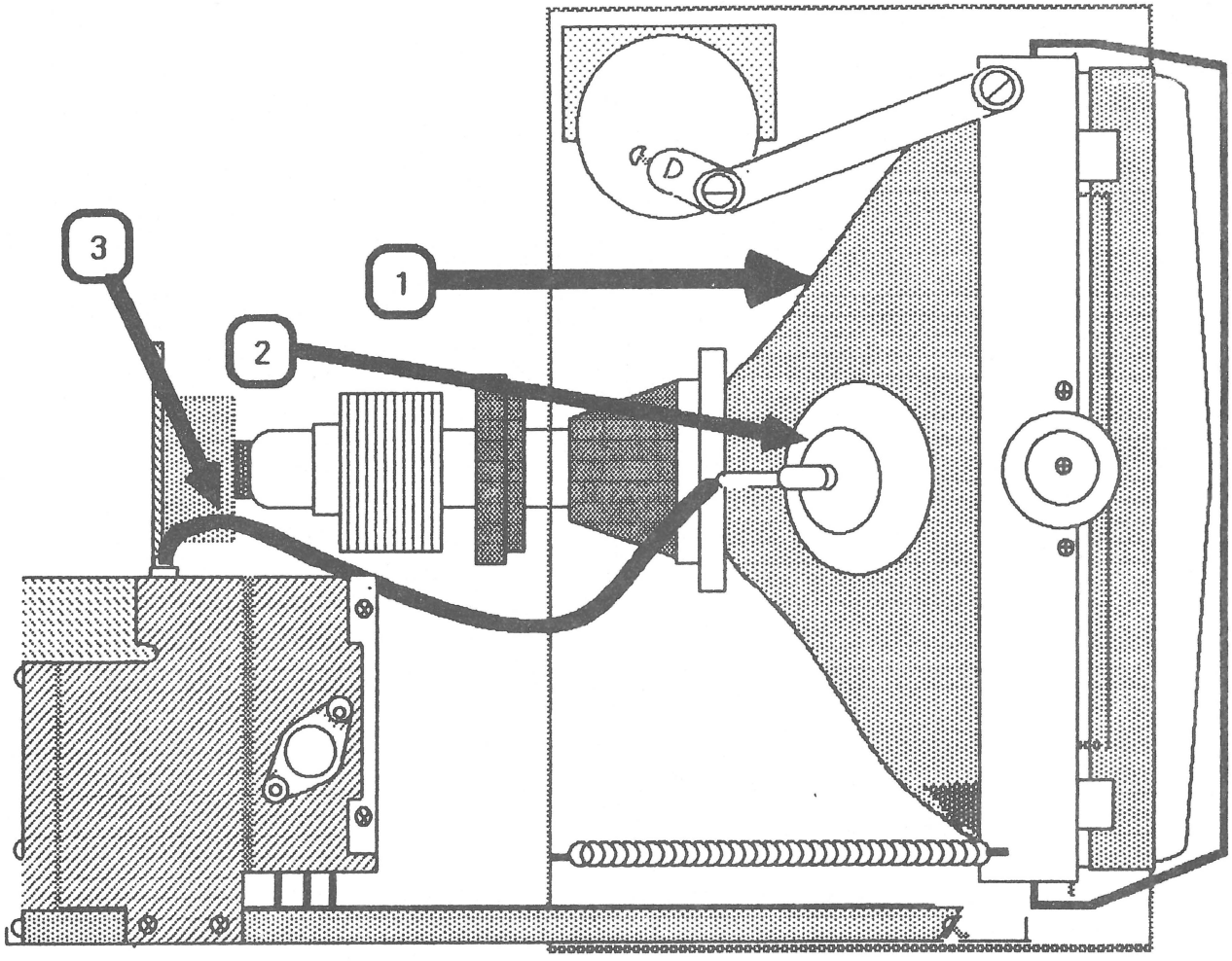

FIGURE 1

LOGIC BOARD ADJUSTMENTS

Introduction

After replacement of the logic board in the AppleColor Monitor 100 the vertical height and/or the vertical hold may need adjustment. It is important that you read all the steps completely before beginning the adjustments, as several of them interact with each other; so if it looks like a step is not working, it's possible that another step will correct the problem.

All yoke assembly adjustments have been preset by the manufacturer. Do not attempt to make any tilt, ring, or geometric adjustments on the AppleColor Monitor 100.

Materials Needed:

Working AppleColor Monitor 100
Apple IIe
Extended 80-Column Text AppleColor Card (P/N 699-0221)
Apple IIe Diagnostic ROM Card (P/N 661-94086)
Plastic hex tip iron core adjustment tool (size 0.00)
Small plastic flatblade screwdriver (tweaker)

WARNING: There are extremely high voltages on the CRT, the anode, and the anode lead. In these adjustments you will be putting your hand near these high voltage parts. It is IMPERATIVE that you watch what you are touching while making any adjustments when the power is on, otherwise injury can result. Avoid touching the CRT, anode, and the anode lead (Figure 1, #1, #2, and #3). Put one hand in your pocket or behind your back while making adjustments! Never hold on to the chassis with your free hand while making adjustments.

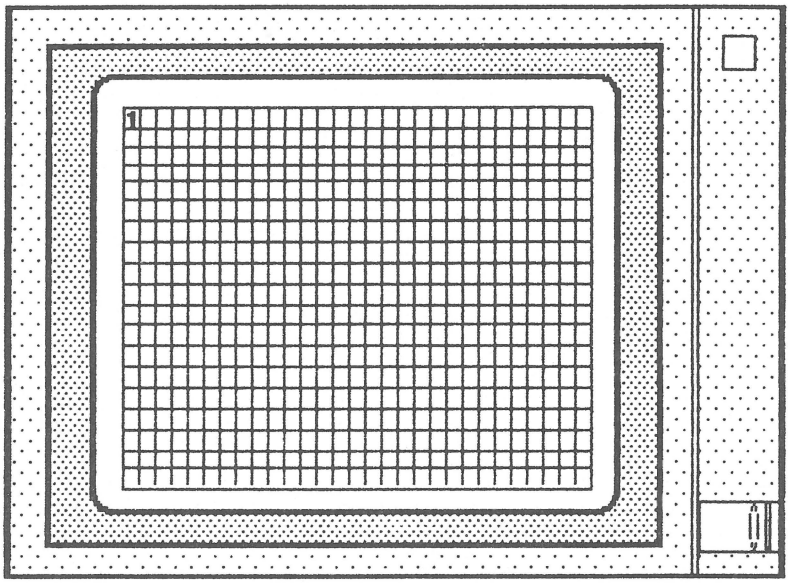

FIGURE 2

Set Up Procedure

WARNING: MAKE SURE THE POWER IS OFF ON THE MONITOR AND ON THE APPLE IIe

1. Remove the rear enclosure (Take-Apart).

2. Connect the AppleColor Monitor 100 to the Apple IIe. If you do not know how to do this, refer to the Extended 80-Column Text Card manual.

3. Insert the Apple IIe ROM card into slot 1 or 2 and make sure that the switch on top of the ROM card is pointing toward the rear of the computer. If you do not know how to do this, refer to the **Diagnostics Section of the Apple IIe Technical Procedures.**

4. Turn on the monitor and the Apple IIe. If the menu does not appear when the power is turned on, the switch on the ROM card is in the wrong position. Shut off the system, change the switch position, and turn the system back on.

5. Select the Video Tests (V) from the menu, then press the spacebar. You will now see a high resolution pattern on the screen. Numbers 1 and 2 should be alternating in the upper left-hand corner of the screen. (Figure 2.)

6. View the screen and evaluate the vertical alignment and horizontal alignment (see the next page for evaluation procedures). Determine which one needs correction and proceed to the correct adjustment. There is interaction between the two adjustments, so you might have to do both to correct any problems.

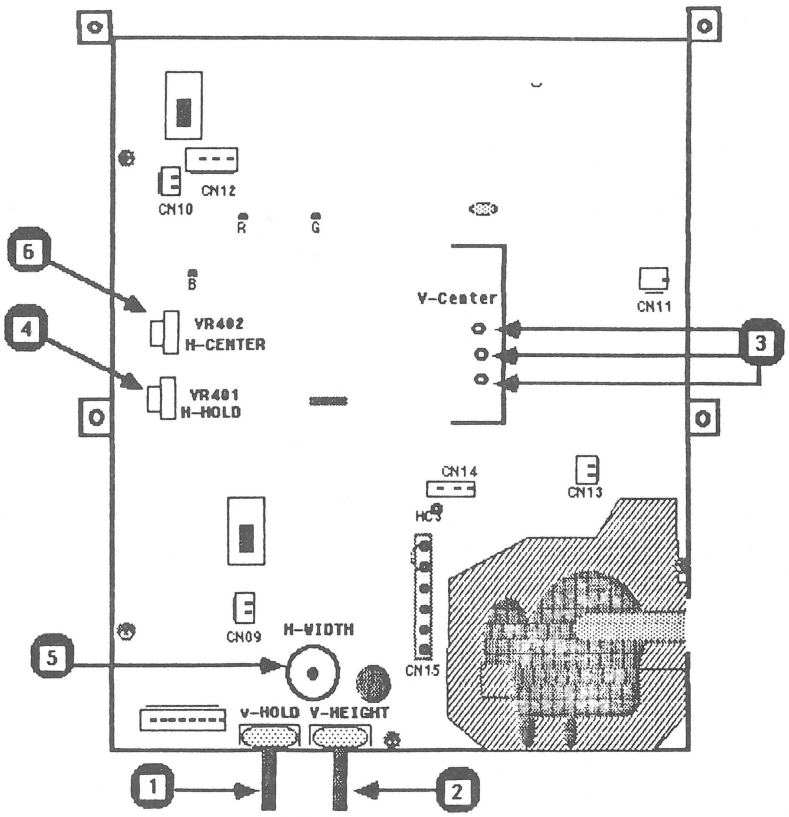

FIGURE 3

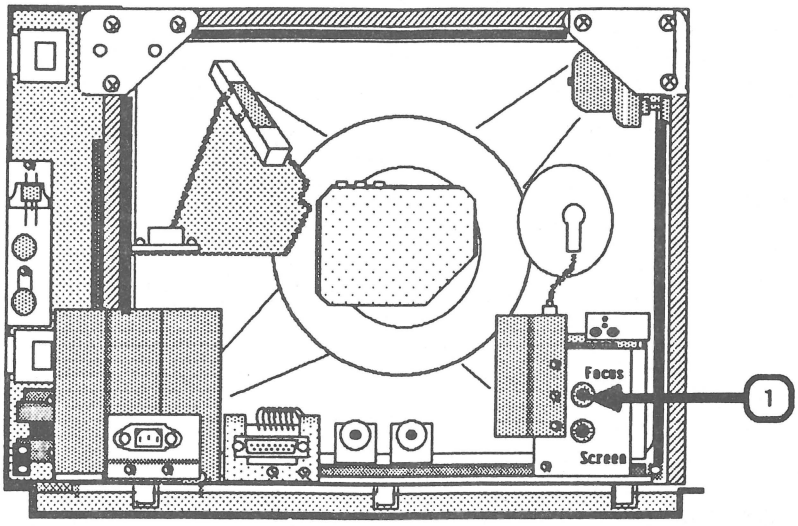

FIGURE 4

Vertical Adjustments

1. Vertical Hold: Set the vertical hold control VR301 (Figure 3, #1) to the mechanical center by turning it all the way to the left, then to the right, then back to the center of the range between left and right of its rotation. This should lock the picture on the screen and prevent any rolling.

   Turn the monitor off and back on, to make sure the vertical hold is secure.

2. Vertical Height: If the vertical height of the image is incorrect, then adjust V-HEIGHT VR302 (Figure 3, #2) until the picture is about 1/4 inch away from the top and bottom edges of the screen.

3. Vertical Center: If the vertical position of the entire image is off, carefully connect the H-C4 connector (Figure 3, #3) to the best position pin to correct this problem. (On the AppleColor Monitor 100 Rev. A, the three pins are not as perfectly aligned as those shown in Figure 3, #3). BE CAREFUL, IT IS CLOSE TO THE CRT NECK!

Horizontal Adjustments

1. Horizontal Hold: If the picture on the tube is not locked and is tearing, adjust H-HOLD R402 (Figure 3, #4).

2. Horizontal Width: The image should be about 1/4 inch away from each side of the screen. If the width of the image looks too narrow or too wide, adjust the H-WIDTH L406 (Figure 3, #5) until you have the desired width.

3. Horizontal Center: If the image is too far to one side of the screen, adjust H-CENTER VR402 (Figure 3, #6) until the image is centered.

Focus Adjustment

If the picture on the screen is blurry adjust the FOCUS pot, which is located at the back of the flyback transformer. (Figure 4, #1.)

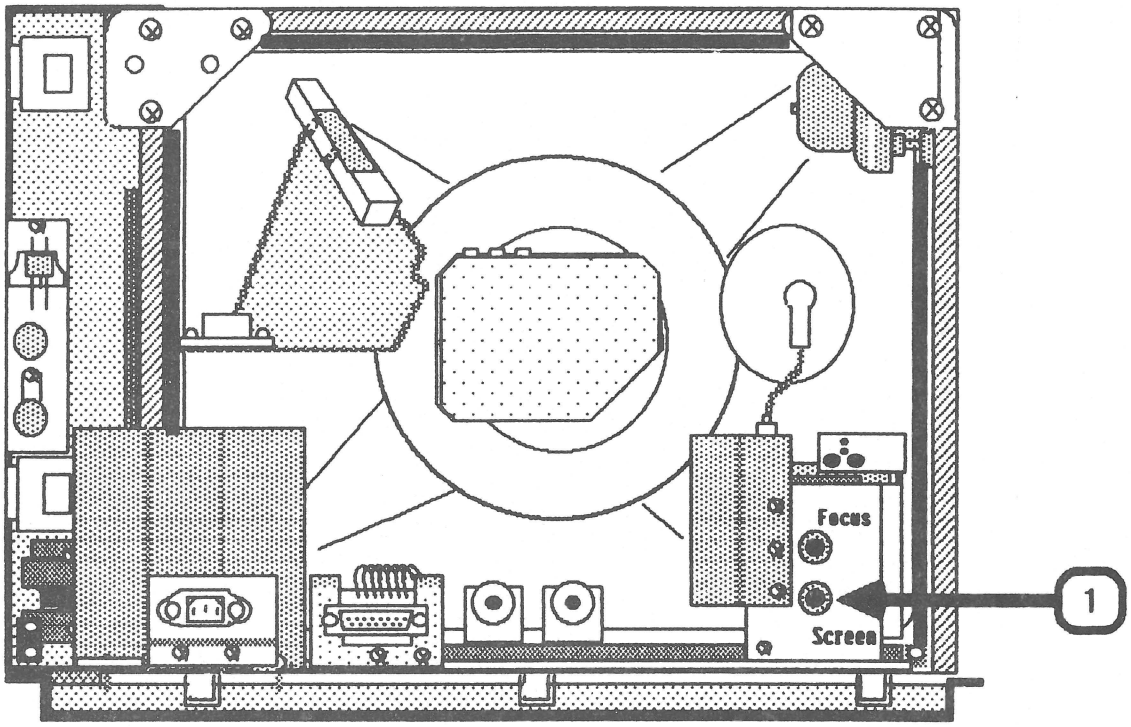

FIGURE 5

COLOR ADJUSTMENTS

Color Bar Check

1. Insert the Extended 80-Column Text/AppleColor Card into the auxiliary slot of the Apple IIe. If you do not know how to do this, refer to the user's manual for the card.

2. Locate the two DIP switches on the Extended 80-Column Card and switch both levers to the lower (bottom) position.

3. Replace the Apple IIe lid.

4. Insert the Extended 80-Column Text AppleColor Card "Demo Drivers Diskette" (ProDOS Based) into the disk drive.

5. Turn on the Apple IIe.

6. Turn on the AppleColor Monitor 100.

7. When the menu appears, press the down arrow on the keyboard to select **"DHR.COLORS"**, then press **"RETURN"**.

   The monitor will display 16 color bars with the name of the color beneath each bar.

8. Make sure that the colors match their names. If they do not match, follow the procedures below to adjust the color.

White Balance

Proper color adjustment is achieved by obtaining "white balance." The white balance is obtained by adjusting the screen potentiometer of the flyback transformer along with all the pots located on the CRT socket board. For this procedure you do not need to connect the monitor to the Apple IIe.

WARNING: MAKE SURE THAT THE POWER IS OFF!

1. Remove the rear enclosure (Refer to **Take-Apart Section**).

   NOTE: Do not connect the DB-15 video cable to the monitor.

2. Connect the AC power cord to the back of the monitor and to the wall outlet.

3. Turn the SCREEN pot (Figure 5, #1) counterclockwise as far as it will turn.

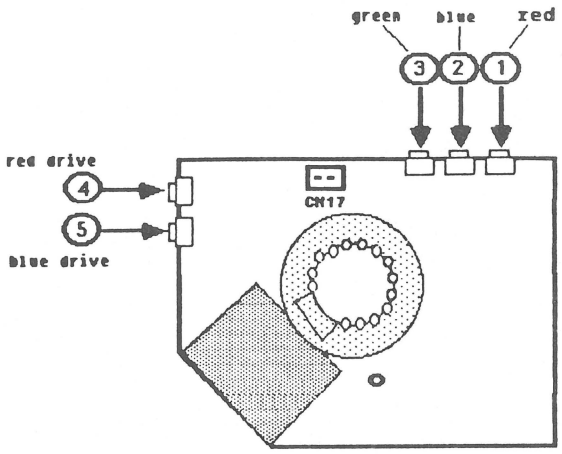

FIGURE 6

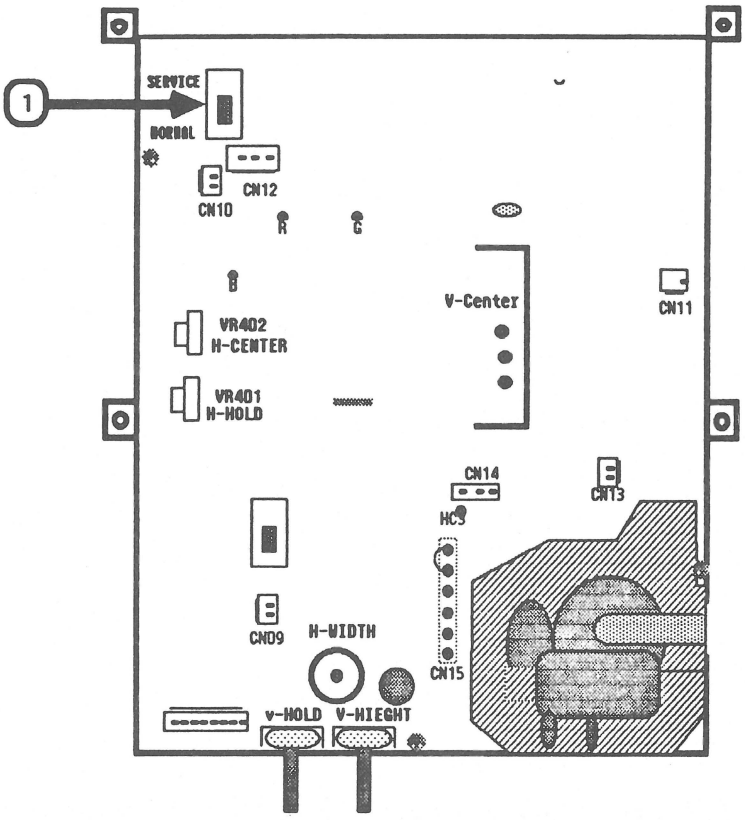

FIGURE 7

4. Adjust the following pots, located on the CRT socket board, to their mechanical centers by turning them all the way to the left, then to the right, then back to the center of the range between left and right:

   a) VR501 (Red Bias) -- Figure 6, #1

   b) VR502 (Green Bias) -- Figure 6, #2

   c) VR503 (Blue Bias) -- Figure 6, #3

   d) VR504 (Red Drive) -- Figure 6, #4

   e) VR505 (Blue Drive) -- Figure 6, #5

5. Use the eraser end of a pencil, or another nonconductive tool, to push Switch (SW) 101 (Figure 7, #1) to the SERVICE position.

6. Turn on the monitor.

7. Observing the center of the screen, turn the SCREEN pot gradually clockwise until you see a horizontal line.

   NOTE: Do not turn the SCREEN pot until the line is glowing, but just until you see a fine, solid line.

   THE LINE SHOULD APPEAR WHITE. If the line is not white, repeat step 7. Watch closely to see which color appears first. Then, adjust the appropriate bias pot(s) (listed in step 4, above) until that color is defeated (no longer appears). If another color appears, repeat this step until the line is white.

8. Turn the SCREEN pot slightly clockwise to make sure that the line remains white. If it is not white adjust the appropriate color bias pot to obtain a white line.

9. Turn the SCREEN pot counterclockwise until the white line disappears.

10. Turn off the monitor and push switch SW 101 (Figure 7, #1) back to the NORMAL position.

11. Turn the monitor back on and repeat the steps listed in the "Color Bar Check" in this manual.

INTRODUCTION

This is the troubleshooting section. It consists of a symptom chart, showing the symptom and an action to be taken to rectify the problem. The best way to use this section is:

1. Look on the chart to find the symptom that matches what the defective monitor is doing.

2. Try the recommended action.

SYMPTOM	ACTION
NO RASTER	Replace fuse 601 on the P/S board with a **250V 2A Slow Blow Fuse.**
	Check that all connectors are secure on the P/S and logic board.
	Replace the Power Switch.
	Replace the P/S board.
	Replace the logic board.
	Replace the power transformer.
	Replace the CRT.
ONE HORIZONTAL RASTER LINE APPEARS	Check to make sure that SW101 on the logic board is in the NORMAL position.
	Replace the logic board.
	Replace the CRT.
ONE VETICAL RASTER LINE APPEARS	Replace the logic board.
	Replace the CRT.
RASTER DEFORMED ABNORMALLY	Replace the CRT.

SYMPTOM	ACTION
ABNORMAL RASTER WITH WINDING OR EXCESSIVE PICTURE FLUCTUATION	Replace the logic board.
SPOT REMAINS WHEN UNIT IS OFF	Replace the logic board.
BRIGHTNESS RANGE ABNORMAL OR PICTURE IS FLASHING	Replace the logic board. Replace the P/S board. Replace the power transformer.
RASTER SIZE SMALL PICTURE ABNORMALLY BRIGHT	See **Section 3, "Adjustments."** Replace the logic board.
NO VERTICAL SYNCHRONIZATION	See **Section 3, "Adjustments."** Replace the logic board.
RASTER NOT CENTERED	See **Section 3, "Adjustments."** Replace the logic board. Replace the CRT.
NO PICTURE NO CONTRAST	Replace the logic board.
PICTURE / CHARACTERS INCLINED	See **Section 3, "Adjustments".**

SYMPTOM	ACTION
FINE NOISES IN PICTURE. CHARACTERS SHIVER.	Make sure the ground strap is secured to the power transfomer. Replace the logic board.
FIFTEEN OR MORE SECONDS FOR PICTURE TO APPEAR	Replace the CRT.
PICTURE APPEARS DISAPPEARS	Replace the logic board. Replace the CRT.
HORIZONTAL LINEARITY BAD	Replace the logic board. Replace the CRT.
VERTICAL LINEARITY BAD	Replace the logic board. Replace the CRT.
WON'T FOCUS	Replace the logic board. Replace the CRT.
COLORS NOT RIGHT	See **Section 3, "Adjustments."**

AppleColor Monitor 100 Technical Procedures

Section 5

Illustrated Parts List

The figures and lists below include all piece parts that can be purchased separately from Apple for the AppleColor Monitor 100, along with their part numbers. These are the only parts available from Apple. Refer to your Apple Service Programs manual for prices.

Contents:

AppleColor Monitor 100.....5.3
Monitor Cables.....5.5

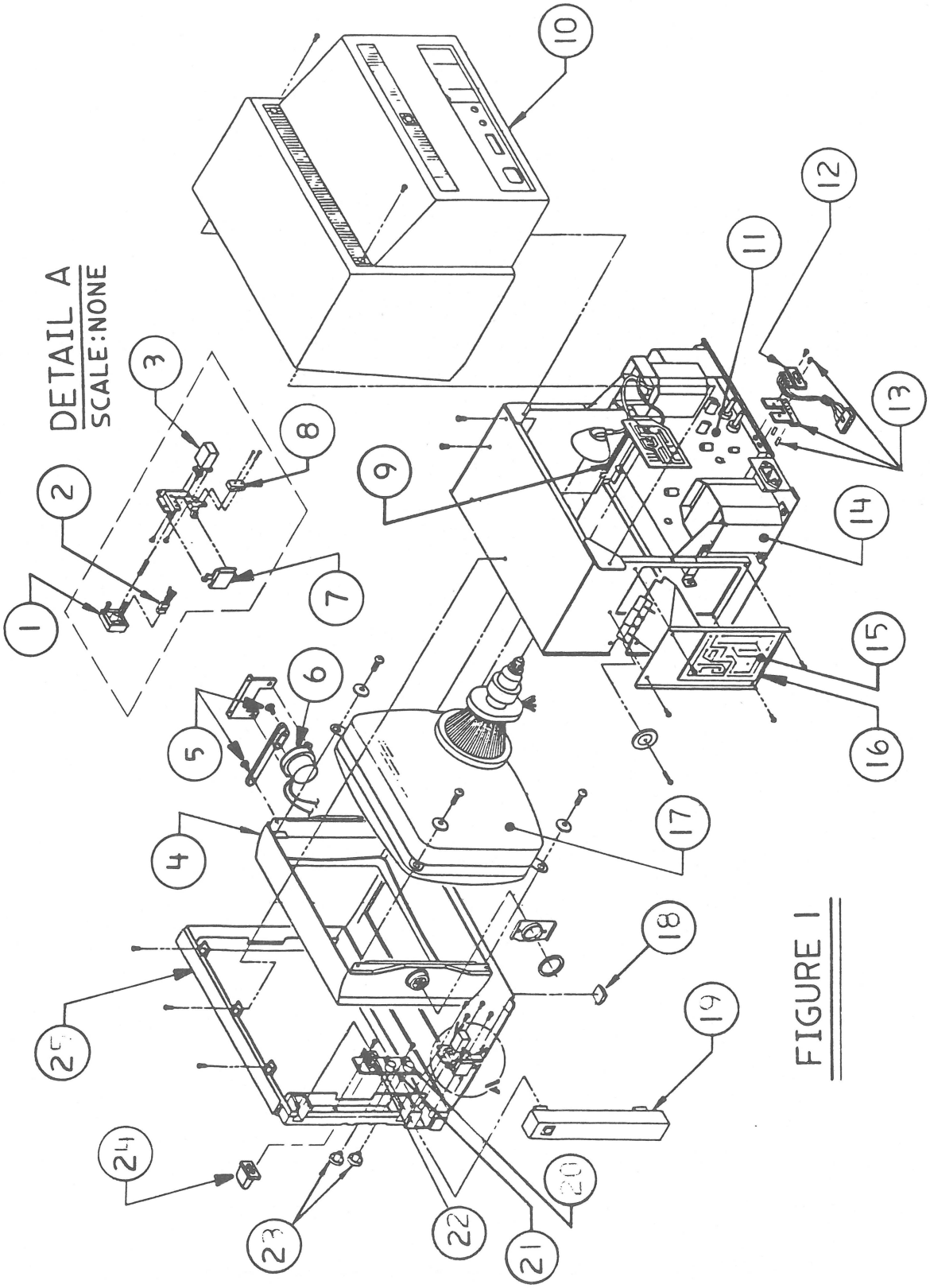
DETAIL A
SCALE:NONE
1
2
3
4
5
6
7
8
9
10
11
12
13
14
15
16
17
18
19
20
21
22
23
24
25

FIGURE 1

APPLECOLOR MONITOR 100 - (Figure 1)

Item	Part No.	Description
1	815-0543	Power Switch Bottom
2	970-1000	LED Assembly
3	970-0995	Power Switch
4	815-0549	Mask
5	931-0003	Screw, shldr, brass, RH thread
6	970-0997	Tilt Motor
7	815-0544	Button, Tilt Switch
8	970-0996	Tilt Motor Switch
9	970-0998	Tilt Loading Spring
10	815-0546	Rear Enclosure
11	661-0238	Logic Board, Rev. O
	661-0292	Logic Board, Rev. A
12	970-0999	DB15 Connector, AppleColor Monitor 100, Rev. 0
	076-0196	DB15 Connector, AppleColor Monitor 100, Rev. A
13	076-0235	Bracket Assembly, DB15 Connector
14	076-8119	Power Transformer
15	740-0204	Fuse, 2A UL, CSA
16	661-0237	Power Supply Board
17	076-8120	CRT/Yoke Assembly
18	865-0020	Rubber Foot
19	815-0545	Control Panel Door
20	970-0990	Brightness Control
21	970-0991	Contrast Control
22	970-0994	Green Only Switch
23	815-0547	Contrast/Brightness Control Knob
24	815-0550	Green Only Button
25	815-0542	Front Bezel

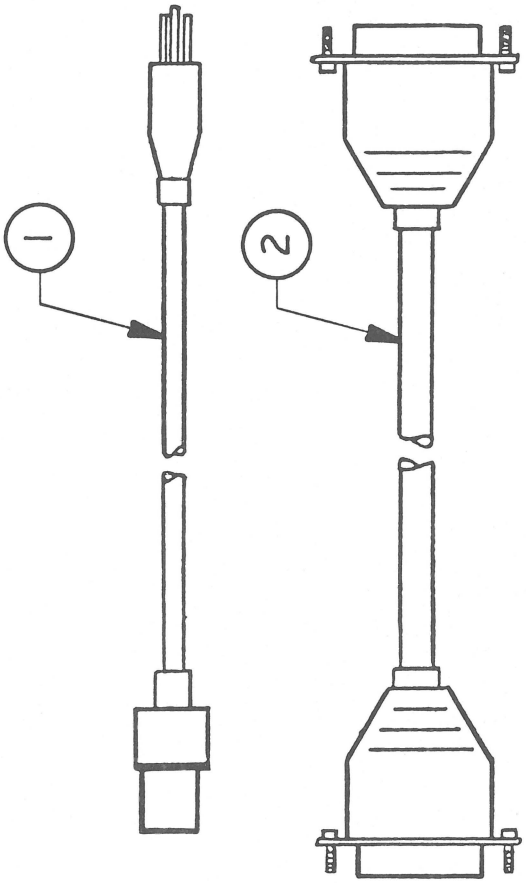

FIGURE 2

APPLECOLOR MONITOR 100 - CABLES (Figure 2)

Item	Part No.	Description
1	970-0876	Cable, AC Power Cord, AppleColor Monitor 100
2	590-0536	RGB Video Cable

Apple Technical Procedures

Monitor III

Section 1 – Monitor III Exchange

CONTENTS

1.3 Introduction
1.3 Safety Precautions
1.6 Exchange Procedure
1.6 Rear Cover Removal
1.8 Rear Cover Installation

©Apple Computer, Inc., 1988. No portion of this document may be reproduced in any form without the written permission of Apple Computer, Inc.

Apple and the Apple logo are registered trademarks of Apple Computer, Inc.

❑ INTRODUCTION

When a customer brings in a defective Monitor III, do not attempt any repair or adjustment procedure. Take a new Monitor III from your service stock and remove the rear cover. Next, remove the rear cover of the failed Monitor III, replace it with the non-serialized rear cover (shipping fixture) from the service stock unit, and return the failed Monitor III to Apple for exchange. Then, install the rear cover from the customer's Monitor III on the back of the service stock unit, and give the service stock Monitor III to the customer.

If you do not have a Monitor III in your service stock, follow the Advanced Exchange procedures described in the *Service Programs Manual* to obtain a replacement monitor (either a Monitor II or a Monitor III) from Apple.

> ***Note:*** The Monitor II should not be used to replace a Monitor III if the customer is using an Apple III computer with the video interlace mode enabled. Differences in the type of phosphors used in the two monitors result in flickering of screen text and graphics when the Monitor II is used with an Apple III computer in video interlace mode.

Safety Precautions

Whenever you remove the rear cover of the Monitor III, you are exposed to the high-voltage Cathode-Ray Tube (CRT)—the picture tube. Because the Monitor III is not equipped with a bleeder resister, the CRT retains a high-voltage charge even when the monitor is turned off. To ensure your safety, the following precautions must be taken when removing the rear cover of the Monitor III:

- **Do not work on the monitor alone.**

  If there is an accident, it could save your life to have someone else nearby. Apple recommends that your staff be trained in cardio-pulmonary resuscitation (CPR).

- **Remove rings, wristwatches, bracelets, hanging necklaces, and other jewelry before removing the back of the monitor.**

  Metal jewelry is an excellent conductor of electricity. Removing jewelry will reduce the possibility of electric shock.

- **Wear safety goggles.**

  The CRT contains a high vacuum. If cracked or broken, it can implode (collapse into itself), then explode. To protect your eyes from serious injury, always wear safety goggles when working on or near a CRT.

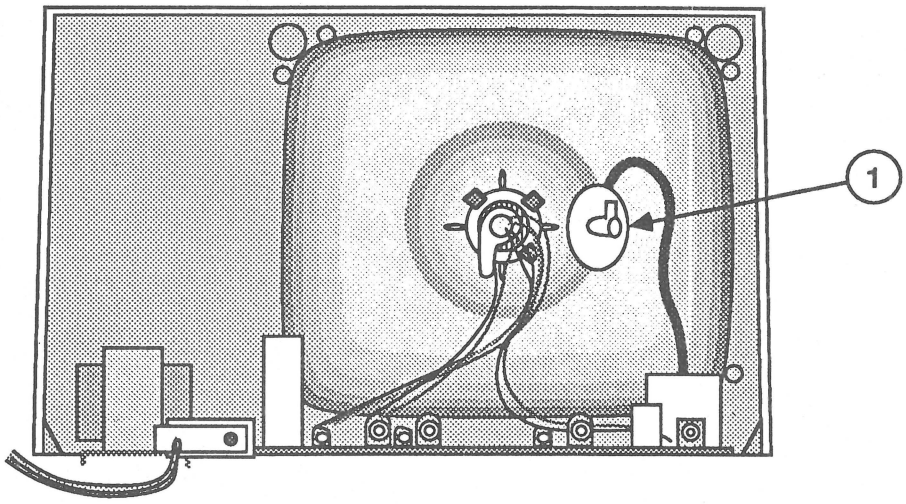

FIGURE 1

- **Never touch the anode connector or the anode aperture.**

  Normally the anode aperture has a connector plugged into it (Figure 1, #1). When a CRT is replaced, the anode connector is removed, exposing the anode. Without a bleeder resistor, the anode can retain a charge of several thousand volts (even when power is off).

- **Before removing the monitor cover, turn off the power and disconnect the AC power cord.**

  Certain parts of a monitor chassis are hot (electrified) when the monitor is under power. Except when you must have the power on (for example, when making live adjustments), never work on a plugged-in monitor—even if you have the power turned off.

- **Be careful of the CRT neck.**

  To prevent an implosion, you should take every precaution against breaking the tube, especially at the neck, where the tube is the thinnest.

❑ EXCHANGE PROCEDURE

Materials Required

#2 Phillips screwdriver

Rear Cover Removal

To remove the rear cover of the Monitor III:

1. Turn the monitor off and disconnect the AC power cord.
2. Place the monitor face down on a soft, protective surface.
3. Remove the two Phillips screws (Figure 2, #1) located on the bottom of the monitor case.

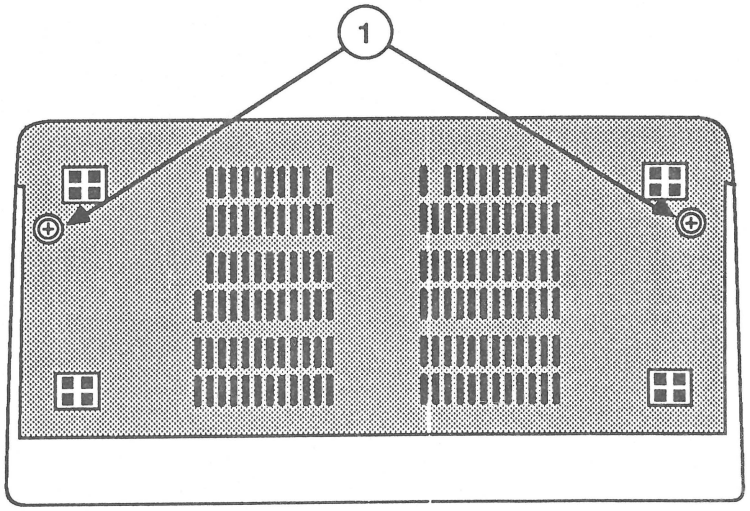

FIGURE 2

4. Remove the single screw (Figure 3, #1) located inside the top handle on the monitor case.
5. Remove the line cord molding screw (Figure 3, #2).
6. Slide the line cord molding (Figure 3, #3) to the left 1/8th inch. Gently push the molding inside the rear cover.
7. Carefully lift the rear cover off the chassis frame, while feeding the line cord (Figure 3, #4) through the opening on the rear cover. Set the rear cover aside.

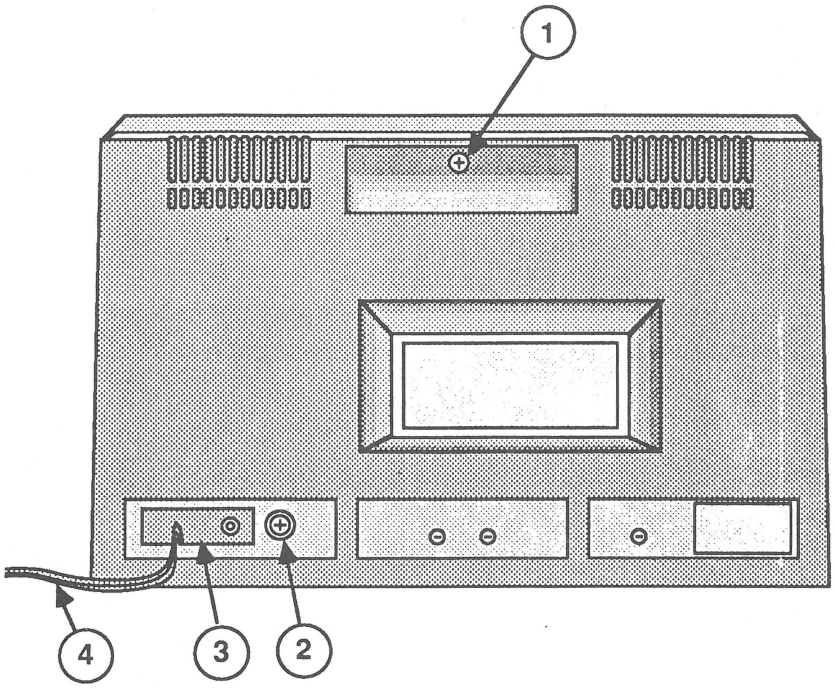

FIGURE 3

8. When the rear cover is off, do not touch the yoke wires (Figure 4, #1), the anode connector (Figure 4, #2), the anode wire (Figure 4, #3), or the flyback transformer (Figure 4, #4).

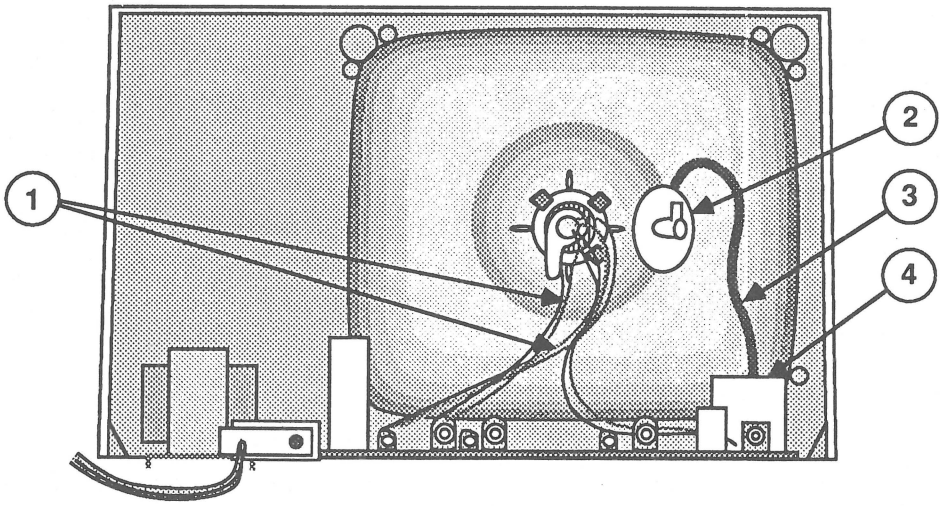

FIGURE 4

Rear Cover Installation

To install the rear cover or shipping fixture on the back of the Monitor III:

1. Feed the line cord (Figure 5, #4) through the opening on the rear cover and lower the rear cover onto the monitor chassis. Position the rear cover so that the two inside slots fit over the sides of the deflection board as you lower the rear cover onto the monitor chassis.

2. Pull the line cord molding (Figure 5, #3) through the opening on the rear cover and slide the molding to the right 1/8th inch.

3. Replace the line cord molding screw (Figure 5, #2).

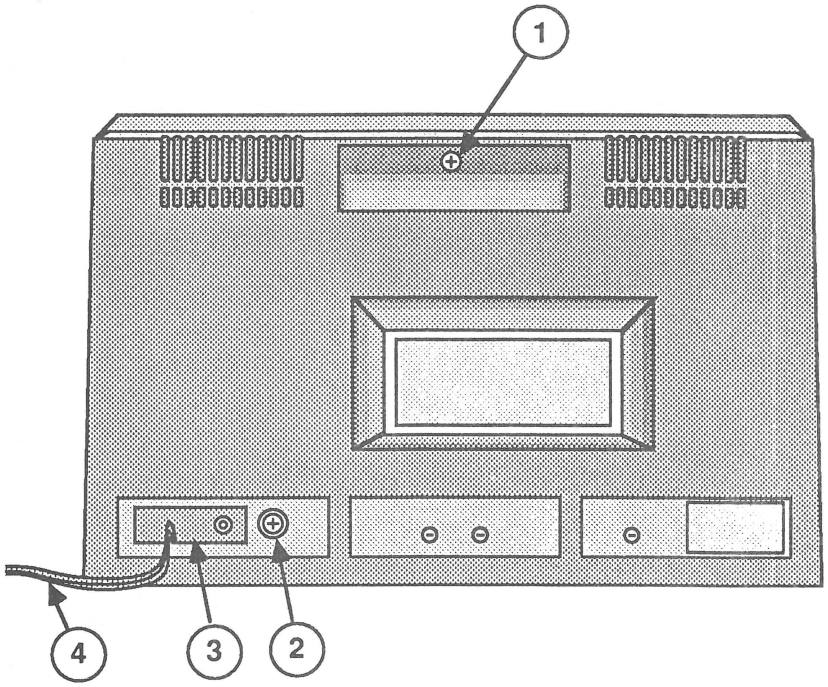

FIGURE 5

4. Replace the single screw (Figure 5, #1) located inside the top handle on the rear cover.

5. Replace the two Phillips screws (Figure 6, #1) located on the bottom of the chassis frame.

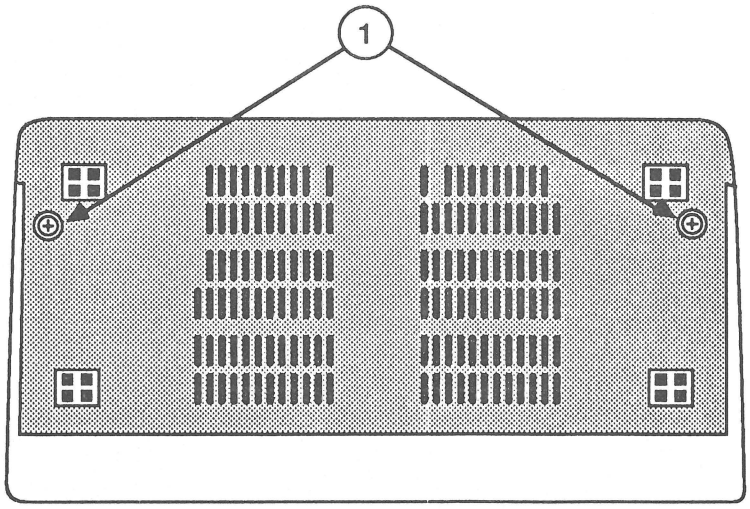

FIGURE 6

6. Carefully set the monitor upright.

APPLE MONITOR IIc TECHNICAL PROCEDURES

TABLE OF CONTENTS

Section 1 - Technical Procedures

Serial Number Transfer.....1.1

Section 2 - Illustrated Parts List

Illustrated Parts List and Diagrams.....2.1

©Apple Computer, Inc., 1985, 1986.
No part of this document may be reproduced in any form without the written permission of Apple Computer, Inc.

Apple and the Apple logo are registered trademarks of Apple Computer, Inc.

APPLE MONITOR IIc TECHNICAL PROCEDURES

Section 1

Serial Number Transfer

Contents:

Serial Number Transfer.....1.2

NOTE: The Monitor IIc should be tested with the Apple II Peripherals Diskette. (See **Multi-Product Diagnostics Technical Procedures, Section 1.**)

SERIAL NUMBER TRANSFER

WHEN A CUSTOMER BRINGS IN A DEFECTIVE MONITOR IIc, HERE'S WHAT YOU DO TO REPLACE IT:

1. Record the serial number from the back of the customer's defective Monitor IIc.

2. Take a new Monitor IIc from your service stock. You will find a transparent label pasted over the original label on the back of the service stock monitor.

3. Use a medium point permanent marker to write in the customer's original serial number at the upper right hand corner of the transparent label. (See Example below.)

EXAMPLE:

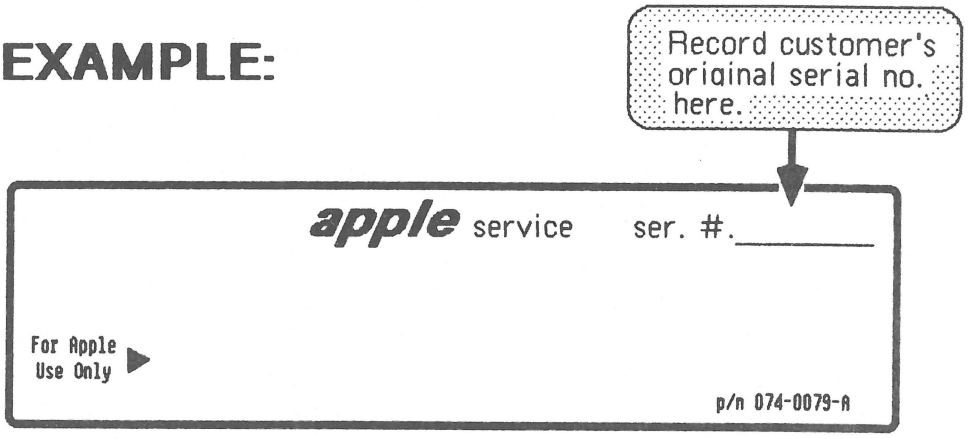

NOTE: For the customer's records, the repair order paperwork should note the serial number exchange.

4. Give the customer the monitor from your service stock, and send the customer's defective monitor to Apple.

NOTE: The customer's power and video cables are not returned to Apple as part of the module exchange. Leave the cables with the customer.

Apple IIc Monitor Technical Procedures

Section 2

Illustrated Parts List

The figures and lists below include all piece parts that can be purchased separately from Apple for the Apple IIc Monitor, along with their part numbers. These are the only parts available from Apple. Refer to your Apple Service Programs manual for prices.

Contents:

Illustrated Parts List.....2.1

NOTE: UNLESS OTHERWISE SPECIFIED

REV.	ZONE	ECO #	REVISION	APP'D	DATE
A		S582	INITIAL RELEASE		

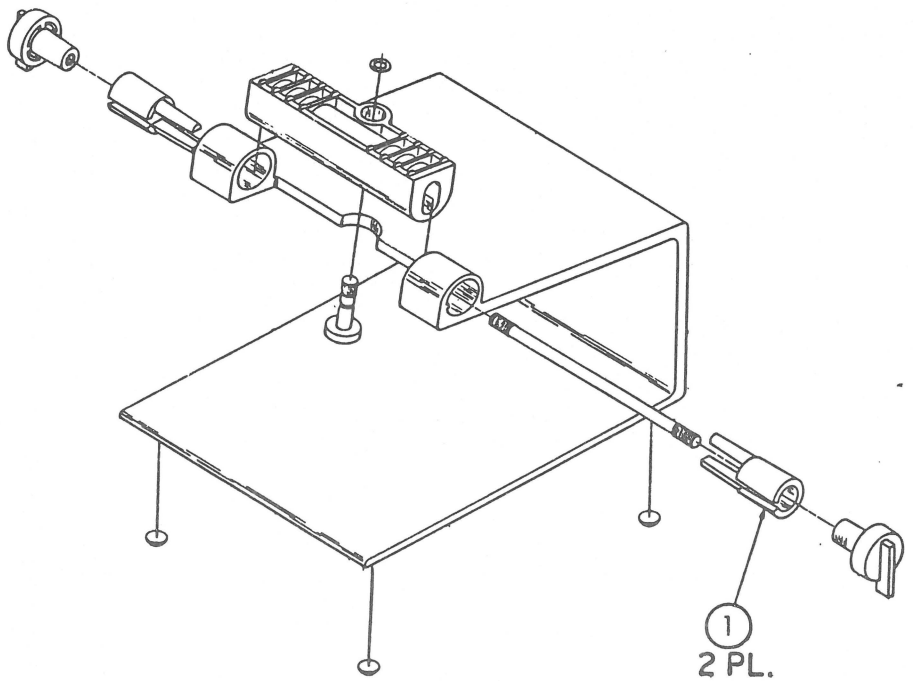

PARTS LIST HELD BY
APPLE SERVICE TRAINING

METRIC

DIMENSIONS ARE IN MILLIMETERS
TOLERANCES
.X ± .XX ± ANGLES ±
MATERIAL:
FINISH:

DRFT Tom Laun	11/84	DRFT CH	11/84
ENG APPVL	11/84	MFG APPVL	
RELEASE	11/84	ORIG. DIV	SERVICE
DESIGN		SCALE	NONE

apple computer inc.

NOTICE OF PROPRIETARY PROPERTY
THE INFORMATION CONTAINED HEREIN IS THE PROPRIETARY PROPERTY OF APPLE COMPUTER, INC. THE POSSESSOR AGREES TO THE FOLLOWING:
i) TO MAINTAIN THIS DOCUMENT IN CONFIDENCE
ii) NOT TO REPRODUCE OR COPY IT
iii) NOT TO REVEAL OR PUBLISH IT IN WHOLE OR PART

TITLE: ILLUS. PARTS LIST
MONITOR STAND
A//c

SIZE: B | DRAWING NUMBER: 070-0208-A | SHT: 1/1

APPLE IIc MONITOR

Item	Part No.	Description
1	076-8117	Monitor IIc Stand Friction Cone, (12)